ricoma

THINK BEYOND

SWIFTXL 2

Parts Book

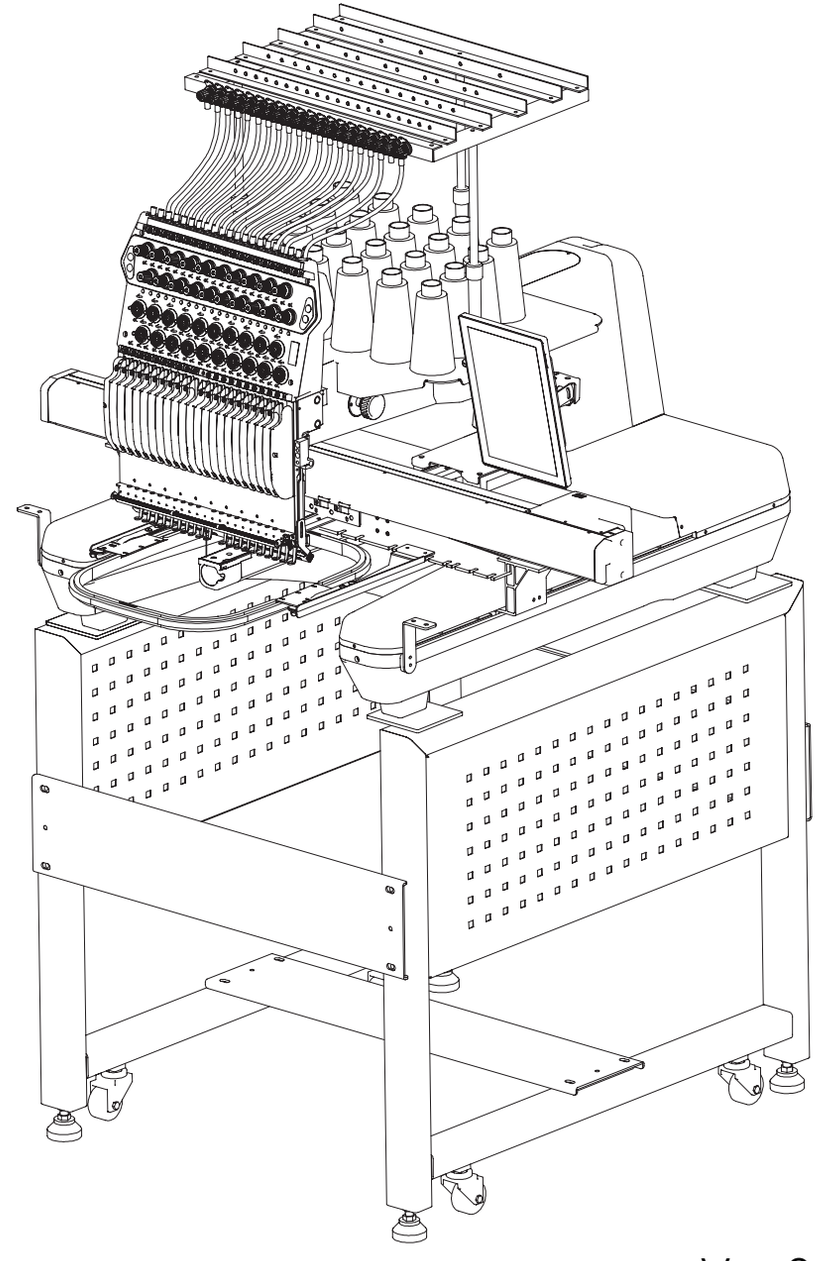

Ver.20260709

Catalogue

01 Cover Base. 01

02 Machine Head. 03

03 Hook and Jump. 08

04 Rotary Hook 10

05 Y - Axis Drive System 13

06 X - Axis Drive System 16

07 Thread Tension Base - Magnetic 19

08 Needle Bar Case. 21

09 Panel Support 24

10 Thread Plate and Thread Stand 26

11 Frame 28

12 Electrical Part - 10S -Control Panel 30

12 Electrical Part 32

*The Company reserves the right of final interpretation. Unauthorized reproduction or commercial use is prohibited. Violators will be held legally liable.

01 Cover Base

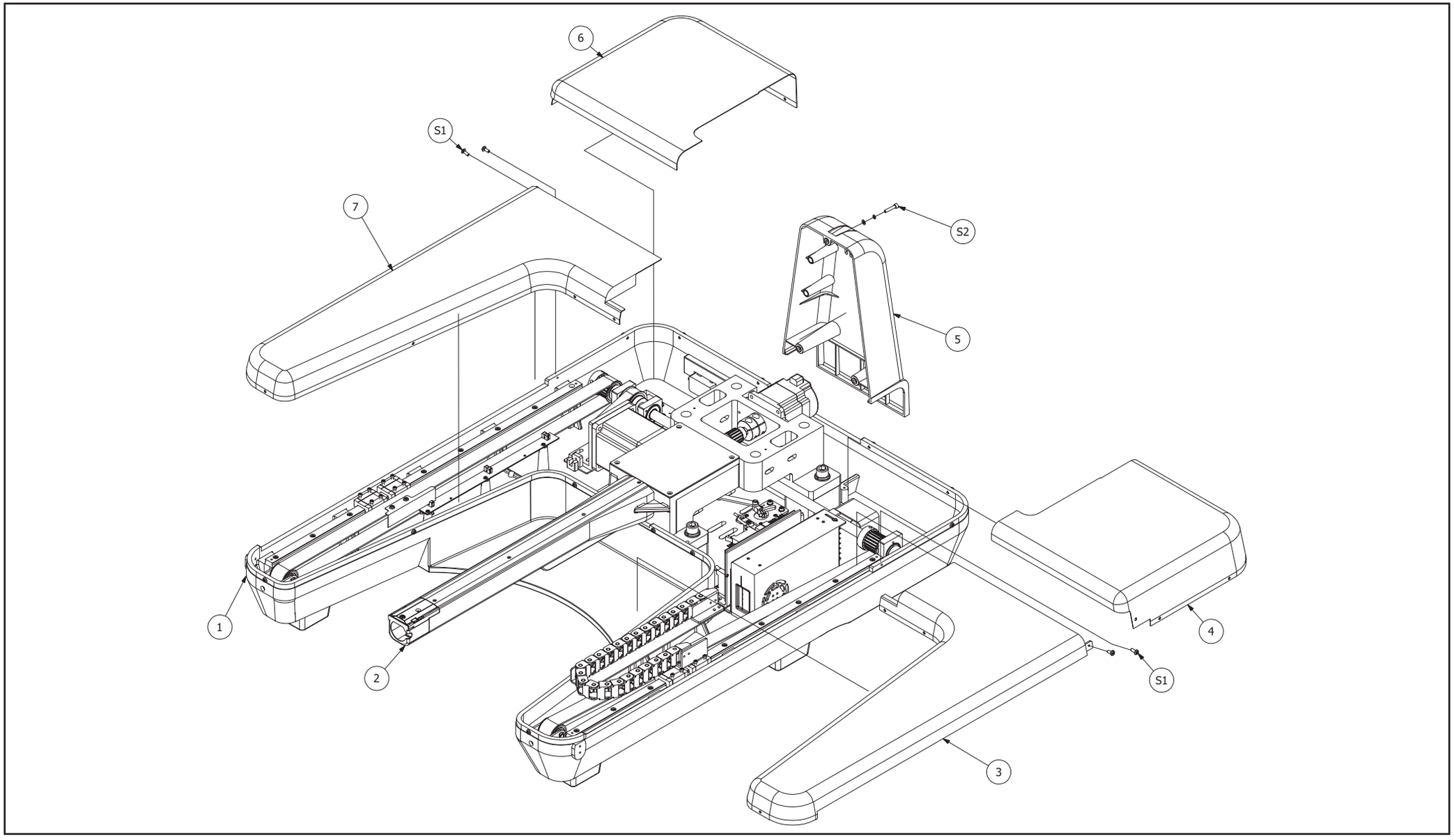

01 Cover Base

Item	Stock Number	Part Number
1	3008010101-PY	Base - SBP
2	3012150114	Cover - needle plate seat - SR-D
3	3008010103-PY	Cover - front right – SBP
4	3008010105-PY	Cover - rear right – SBP
5	3005012701	Rear cover
6	3008010102-PY	Cover - rear left - SBP
7	3008010104-PY	Cover - front left - SBP
S1	80746410	Large round head cross screw,M4 × 10
S2	80813470	Cylinder head hexagon socket combination screw, m4 × 20 + spring washer + plain washer

Item	Stock Number	Part Number

02 Machine Head

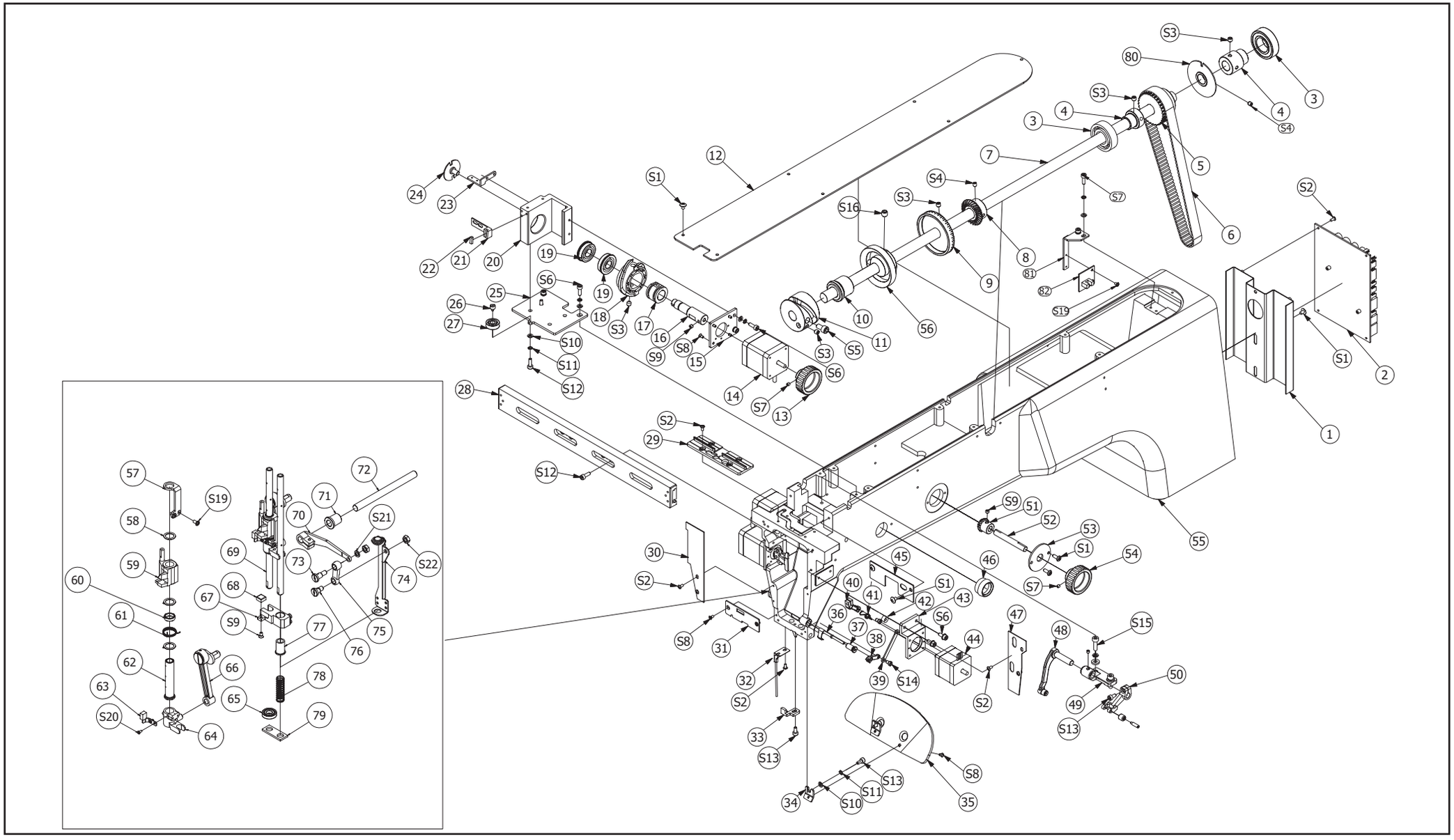

02 Machine Head

Item	Stock Number	Part Number
1	7501020121	Mounting plate - main board – TC
2	03150760VA	Multifunction board + DSP board
3	80032022	Deep groove ball bearing - 6004ZZ
4	80031502	Bearing sleeve φ15 - 20
5	80025601	Pulley 32 - S5M -2 0- 15
6	80025506	Timing belt - S5M - 525 - 16
7	3008041201	Upper shaft - SBP-728
8	01030136	Large bevel gear - 36 teeth - D15
9	03041211	Main shaft dial
10	03041202AA	Bearing – main axis- front
11	03040203	Head take-up cam - EA
12	3008012702-PY	Head top cover - SBP
13	03040511RA	Color change handle
14	80304262	Stepping motor 42 H 62 - D5
15	03040701	Head motor plate
16	03040528VA	Shaft - color change cam - P

Item	Stock Number	Part Number
17	0129003812B	Color change cam - dual rail – cassette-injection molded aluminum bushing
18	0129003812A	Color change cam - dual rail – cassette
19	80031224	Flange bearing 12 × 28 × 8
20	03040540	Bearing housing - color change - P
21	03040543AA	Needle position magnet holder – hall
22	03040547	Strong magnet - 10 × 3 × 3
23	03040514	Sensor bracket - 20N
24	03040515	Half turn baffle - 20N
25	03040501BA	Color change cam mounting plate - TC
26	03040507	Color change bearing pin
27	80030722	Deep groove bearing 19 - 7 - 6
28	03040196CA	Guide rail - 15
29	3005041101	Guide plate - take - up lever – SMP
30	3005040104	Left side cover plate
31	03040123	Cover plate - head - front lower
32	03040163	TC laser cable

02 Machine Head

Item	Stock Number	Part Number
33	03040121CA	Positioning hook - lower guide rail - single head – R
34	03040154	Head lower baffle bracket
35	03040151	Head lower baffle
36	3005040806	Thread clamping push block assembly
37	3005040809	Copper bushing - thread clamp
38	3005040804	Clamp link 1
39	3005040805	Clamp link 2
40	3005040808	Thread locking motor swing lever
41	3005040803	Push block return spring
42	03040706	Silencer block
43	3005040802	Motor mount – 35
44	80303501	Two-phase stepper motor
45	03040126	Head front upper cover plate
46	03041281	Dial viewing lens - kit
47	3005040105	Right side cover plate
48	03041193	Take - up main connecting rod assembly

Item	Stock Number	Part Number
49	03041101	Take-up lever base
50	03041192	Take-up transmission assembly
51	01030137	Small bevel gear - 18 teeth - D7.94
52	03041302	Adjustment handle shaft
53	03041301	Handle bushing
54	03041304	Adjustment handle - 8 – black
55	3008040101-PY	Head - SBP
56	03040404	Presser foot cam
57	03040303	Needle bar driver bracket
58	03040309	Driver shim
59	03040305	Reciprocator
60	03040304	Torsion spring positioning sleeve - V2
61	03040306V2	Reciprocator resetting spring- V2
62	03040308	Needle bar driver sliding sleeve
63	03040323	Reciprocator limit bracket
64	03040307	Needle bar reciprocator

02 Machine Head

Item	Stock Number	Part Number
65	80037921	Bearing - 7.24 -17 -4
66	03040292	Needle bar drive link assembly
67	03040424VA	Presser foot driver block
68	01212201	Presser foot buffer cushion
69	03040351	Head drive shaft – P
70	03040430	Presser foot driving connection rod
71	80030803	Sleeve - 8 - 12
72	03040431	Presser foot drive shaft
73	03040411	Small link pin - upper
74	03040421	Presser foot slide bracket
75	03040403	Presser foot connection rod
76	03040412	Small link pin – lower
77	03040423	Drive shaft sleeve B
78	03040425	Presser foot guide spring
79	03040111	Oil felt
80	03041207VA	Zero position baffle

Item	Stock Number	Part Number
81	03041208	Zero position sensor bracket
82	7501040113	Zero position sensor
S1	80746406	Cross recessed pan head screw M4 × 6
S2	80746306	Cross recessed pan head screw M3 × 6
S3	80880606	Hexagon socket set screw M6 × 6 - black oxide core
S4	80880506	Hexagon socket set screw M5 × 6 - black oxide core
S5	80880304	Hexagon socket set screw M3 × 4 - black oxide core
S6	80813612	Hexagon socket set screw M3 × 4 - black oxide core
S7	80813471	Hexagon socket head cap combination screw M 4 x 12 + spring washer + flat washer
S8	80880404	Hexagon socket set screw M4 × 4 - black oxide core
S9	80860326	M3 × 6 flat head philips screwS10
S10	80880504	M5 × 4 hexagon socket set - black
S11	80900403	Flat washer M4 stainless steel
S12	80900418	Spring washer M4 stainless steel
S13	80813412	Hexagon socket head cap screw m4 × 12 - stainless steel
S14	80813408	Hexagon socket head cap screw M4 × 8 - stainless steel

02 Machine Head

Item	Stock Number	Part Number
S15	3005040801	4M connecting post
S16	80880808	Hexagon socket set screw M8 × 8 - black oxide core
S17	80746408	Cross recessed pan head screw M4 × 8
S18	80860304	M3 × 4 flat head philips screw
S19	80742306	M3 × 6 flanged cross recessed pan head screw
S20	80740204	Cross recessed button head screw M2 × 4
S21	80900518	Spring washer M5 - stainless steel
S22	80900528	Nut M5 - stainless steel

Item	Stock Number	Part Number

03 Hook and Jump

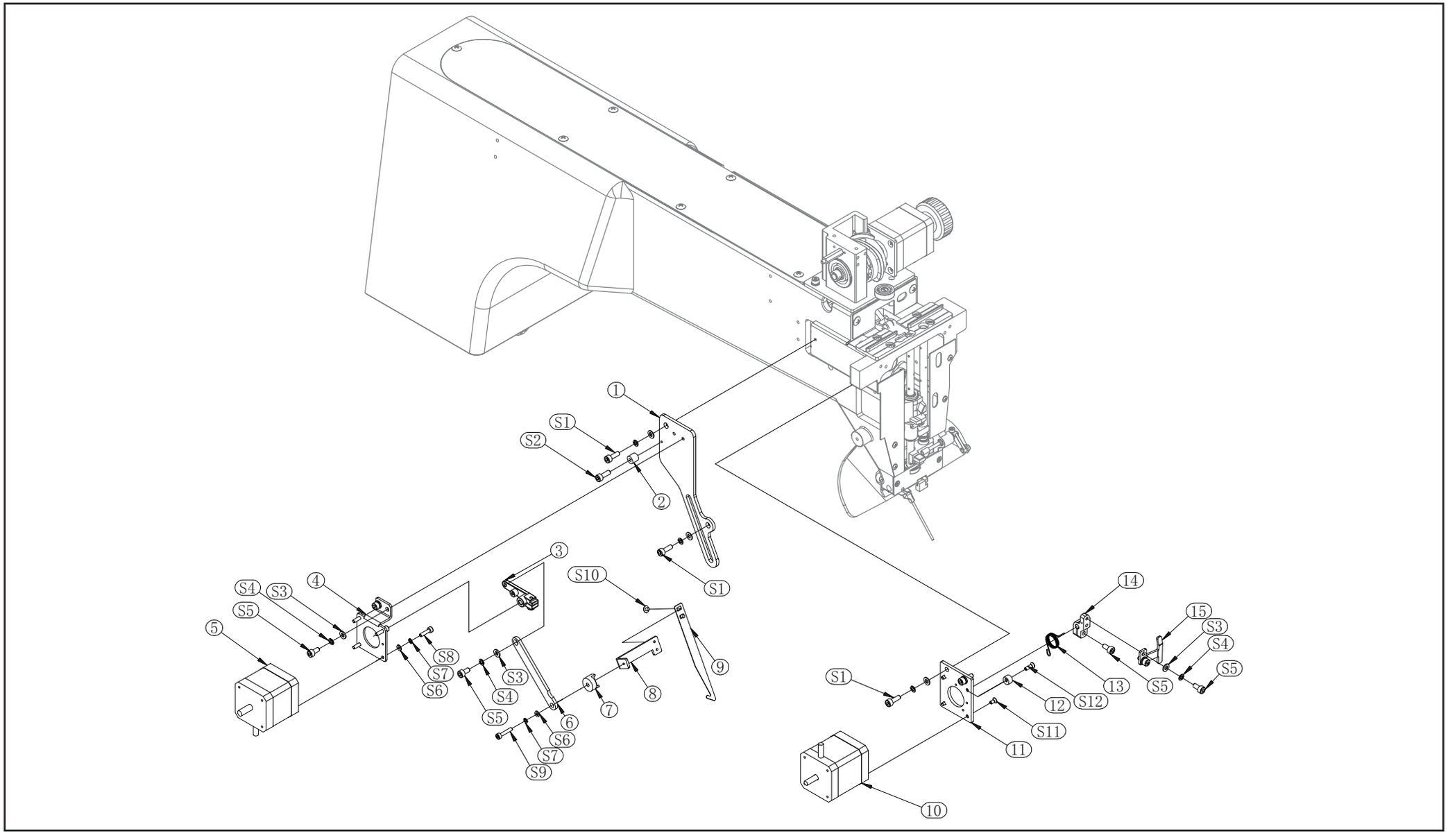

03 Hook and Jump

Item	Stock Number	Part Number
1	03040601	Thread hook plate
2	03040605	Silencer block - ø12 × 6 - M3
3	03040603	Thread hook drive arm
4	03040602	Thread hook motor mount
5	80304263VA	Stepper motor 42 H 62 - D5
6	03040606	Hook connection bar
7	03040607	Thread hook fixing block
8	03040610	Thread hook connecting block
9	03040611AA	Thread hook
10	80304213	Jump motor 42 BYGH 5201 - 01
11	03040701	Motor plate
12	03040706	Silencer block
13	03040705	Jump torsion spring
14	03040702	Head jump plate
15	03040703	Jumping bar bracket
S1	80813471	Hexagon socket head cap combination screw M4 x 12 + spring washer + flat washer

Item	Stock Number	Part Number
S2	80813412	Hexagon socket head cap screw M4 × 12
S3	80900403	Flat washer M4
S4	80900418	Spring washer M4
S5	80813408	Hexagon socket head cap screw M4 × 8
S6	80900310	Large flat washer M3
S7	80900318	Spring washer M3
S8	80813312	Hexagon socket head cap screw M3 × 12
S9	80813316	Hexagon socket head cap screw M3 × 16
S10	80746303	Cross recessed pan head screw - M3 × 3
S11	80860326	Countersunk head phillips screw M3 × 6
S12	80860329	Countersunk head phillips screw M3 × 10

04 Rotary Hook

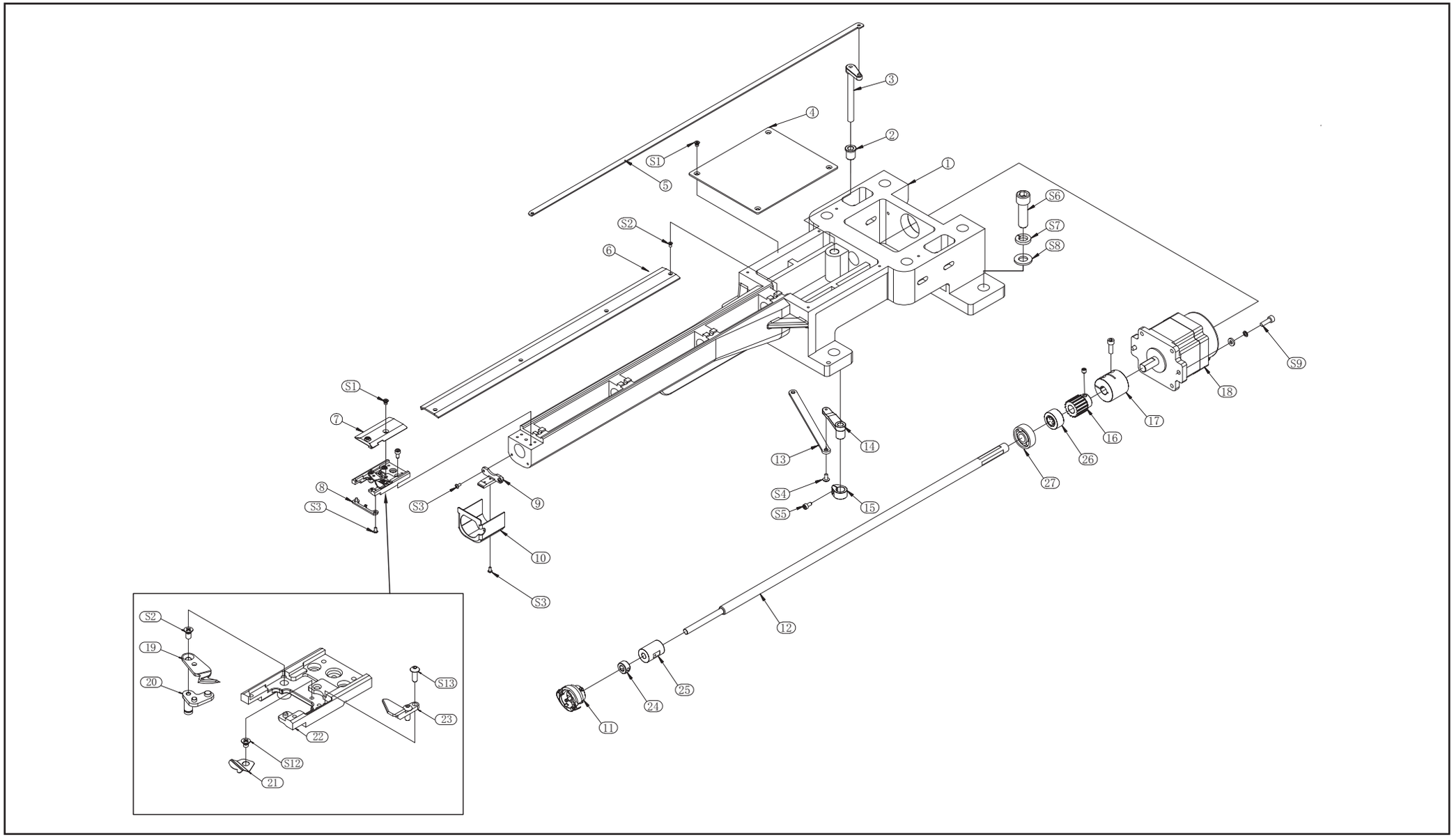

04 Rotary Hook

Item	Stock Number	Part Number
1	3008021102-PY	Shuttle box – SBP
2	80030803	Face bushing - 8 -12
3	03021280	Trimming drive bar set
4	3008010201	Shuttle box rear cover - SBP
5	3008021210	Trimming pull rod
6	3008010202	Shuttle box cover plate - SBP
7	3006021112BA	Needle plate
8	3012150202	Positioning hook – rotary hook - SRD
9	3012150113	Bracket - shuttle box cover – SRD
10	3012150114	Cover - needle plate base
11	80620295	Rotary hook
12	3008021101	Arm shaft - SBP
13	3005021206	Trimming connection rod - SMP
14	3005021207	Trimming rotating connecting rod
15	3005021208	Trimming rotating connecting rod sleeve
16	80025602AA	Pulley - S5M - 16 - 20

Item	Stock Number	Part Number
17	80031211	Bearing bushing φ12
18	80310724	Brushless servo motor – 70 SF 3 A 60 - 340 - 1000Z
19	02101231AA	Movable knife – TX
20	3012150210	Drive rod – movable knife – SRD
21	02101233	Fixed knife shrapnel
22	3012150201	Needle plate base
23	02101232AA	Fixed knife – TX
24	02010633	Baffle ring of shuttle box shaft – SY
25	3012150110	Bearing sleeve – rotary hook
26	3005021103	Baffle ring of shuttle box shaft – D12
27	80031222	Deep groove ball bearing 6201ZZ
S1	80860406	Countersunk head phillips screw M4 × 6
S2	80860326	Countersunk head phillips screw M3 × 6
S3	80746306	Large round head phillips screw - M3 × 6
S4	80746408	Large round head phillips screw - M4 × 8
S5	80813408	Socket head cap screw - M4 × 8

04 Rotary Hook

Item	Stock Number	Part Number
S6	80811240	Hexagon socket cap screw - M12 × 40
S7	80901213	Spring washer M12
S8	80901202	Flat washer M12
S9	80813582	Hexagon socket cap combination screw M5 × 16 with spring washer & flat washer
S10	80860304	Countersunk head phillips screw M3 × 4
S11	80760308	Half - round head internal hex screw - M3 × 8

Item	Stock Number	Part Number

05 Y - Axis Drive System

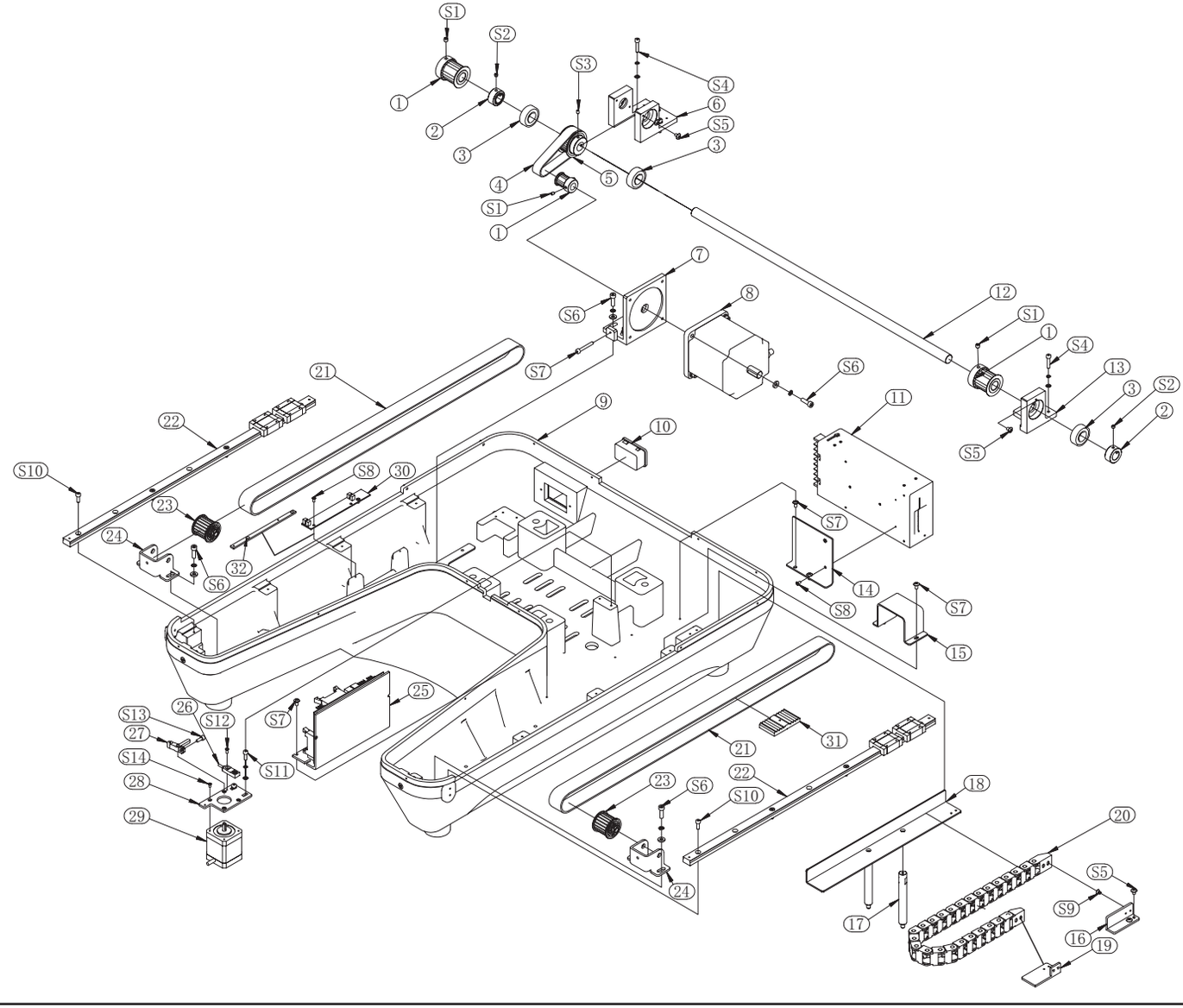

05 Y - Axis Drive System

Item	Stock Number	Part Number
1	3012212392	Timing pulley S5M - 20 - 25 - H15
2	3005105102	Retaining ring D15
3	80031528	Deep groove ball bearing 6002Z
4	80025513	Timing belt S5M - 295 - 25
5	3012212390	Timing pulley S5M - 40 - 25
6	3005105105	Pulley housing y - SMP
7	3005105104	Drive motor base Y - SMP
8	8030008703	Closed-loop stepper motor 86
9	3008010101-PY	Machine base SBP
10	3006153101B	Power switch base with fuse
11	80380641	Switching power supply
12	3008105101	Drive shaft Y - SBP - 15 - 655
13	3005105107	Bearing housing Y - SMP
14	3005150902	Mounting base for switching power supply
15	3005150903	Cable protective cover
16	3005105110	Mounting base b for cable drag chain

Item	Stock Number	Part Number
17	3008105111	Column - drag chain - SBP
18	3008105114	Short tray - SBP
19	3005105109	Mounting base A - drag chain
20	3005105114	Nylon drag chain - 10 - 15
21	80025521	Timing belt S5M - W25
22	80015121	Y-axis linear guide rail assembly (length 670)
23	3012212391	Timing pulley
24	3005105134	Driven pulley assembly Y - SMP
25	7501030163	Stepper closed - loop driver
26	80333601AA	Micro proximity switch - NPN
27	3005021205	Trimming drive arm
28	3005021203	Mounting plate - trimming motor
29	3006041401	42 Motor
30	7501040112AA	Limit sensor
31	03105108VA	Gear platen - Y
32	3005105162	Spacer for Y - axis sensor - SMP

05 Y - Axis Drive System

Item	Stock Number	Part Number
S1	80880606	Hexagon socket set screw M6 × 6
S2	80880504	Hexagon socket set screw M5 × 4
S3	80880406	Hexagon socket set screw M4 × 6
S4	80813470	Hexagon socket head combination screw M4 × 20 with spring washer & flat washer
S5	80746406	Large round head phillips screw M4 × 6
S6	80813582	Hexagon socket head combination screw M5 × 16 with spring washer & flat washer
S7	80746408	Large round head phillips screw M4 × 8
S8	80746306	Large round head phillips screw M3 × 6
S9	80746406	Large round head phillips screw M4 × 6
S10	80810412	Hexagon socket head cap screw M4 × 12
S11	80813471	Hexagon socket head combination screw M4 × 12
S12	80860328	Countersunk head phillips screw M3 × 8
S13	80810410	Hexagon socket head cap screw M4 × 10
S14	80860326	Countersunk head phillips screw M3 × 6

Item	Stock Number	Part Number

06 X - Axis Drive System

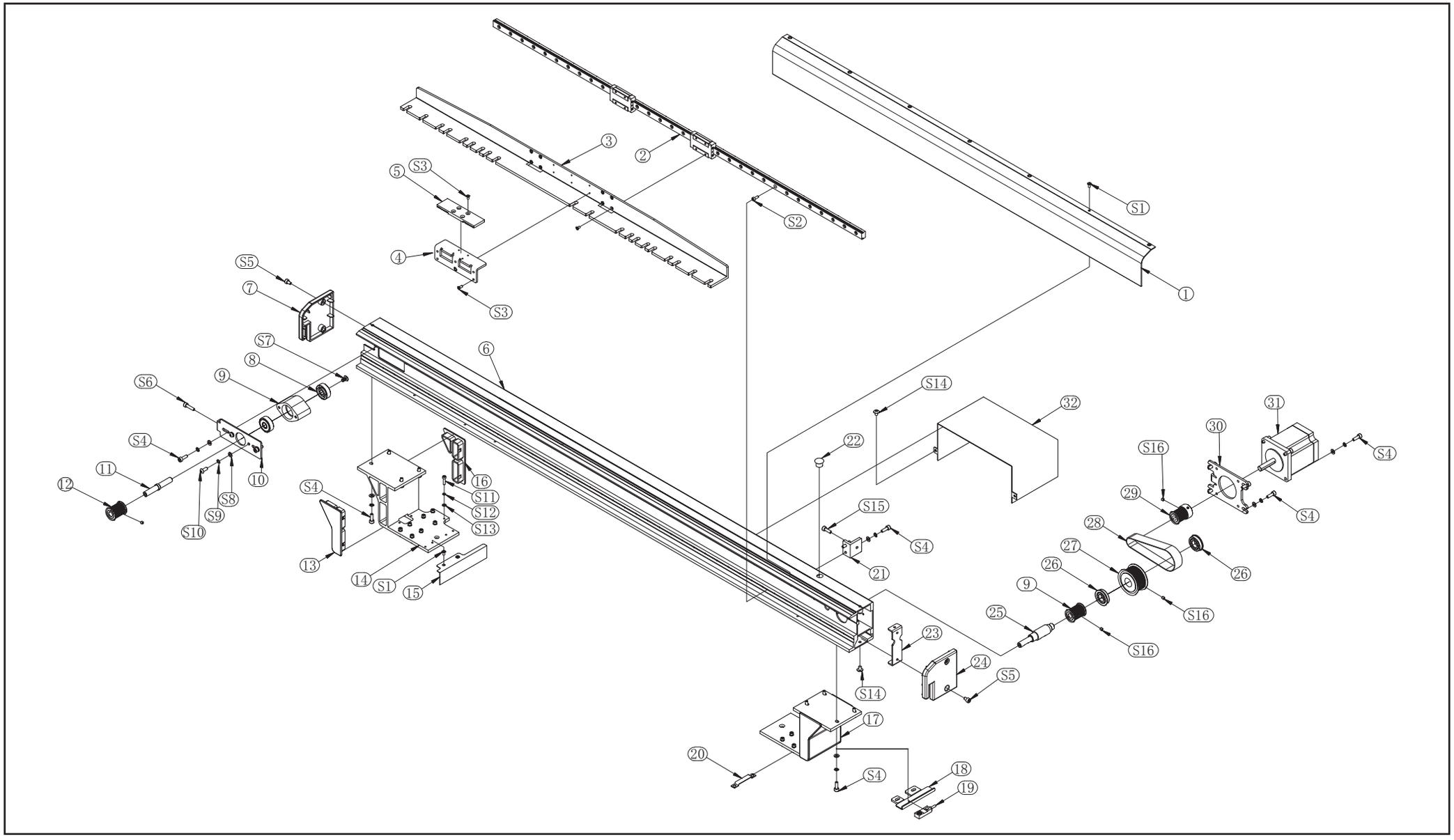

06 X - Axis Drive System

Item	Stock Number	Part Number
1	3008100118	X - axis drive cover
2	80015123	X - axis linear guide rail
3	3005100114	L - shaped drive connecting plate - SMP
4	3005100122	Belt base B - SMP
5	3005100121	Belt pressing plate
6	3008100116	X - axis drive frame X-SBP-1070
7	3005100118	X - axis left cover - SMP
8	80030874	Deep groove ball bearing 24 - 8 - 8
9	3005100105	X - axis driven pulley housing
10	3005100111	X - axis belt adjustment base
11	3005100104	X - axis driven shaft
12	80025801	Driven pulley S3M - 20 - 22
13	3005105115	Left cover of guide rail support
14	3005105103	Left guide rail support
15	3008105113	Y - axis induction piece - SBP
16	3005105116	Right cover of guide rail support

Item	Stock Number	Part Number
17	3005105113	Right guide rail support
18	3008100124	Limit switch positioning base - SBP
19	80333611	Mini proximity switch - NPN
20	3005105163	Y-axis cable pressing piece
21	3005100103	Tension base for X - axis motor
22	3005100125	Short inverted silicone plug
23	3005100106	Bracket for left & right X - axis drive cover
24	3005100119	X - axis right drive cover - SMP
25	3005100109	X - axis driving shaft
26	80030875	Flanged deep groove ball bearing
27	80025802	Driven pulley S3M - 40 - 15
28	80025701	Closed rubber timing belt S3M - 243 - 15
29	800258203	Driving pulley S3M - 20 - 17
30	3005100108	X - axis motor mounting base
31	80306101	Stepper closed - loop motor 60 H 90 - S8
32	3005100117-PY	X - axis motor housing - smp

06 X - Axis Drive System

Item	Stock Number	Part Number
S1	80746306	Large round head phillips screw M3 × 6
S2	80810308	Hexagon socket head cap screw M3 × 8
S3	80746308	Large round head phillips screw M3 × 8
S4	80860326	Countersunk head phillips screw M3 × 6
S5	80813471	Hexagon socket head combination screw M4 × 12 with spring washer & flat washer
S6	80813406	Hexagon socket head cap screw M4 × 6
S7	80813416	Hexagon socket head cap screw M4 × 16
S8	80746406	Large round head phillips screw M4 × 16
S9	80900403	Flat washer M4
S10	80900418	Spring washer M4
S11	80750407	Hexagon socket head cap screw M4 × 10
S12	80813312	Hexagon socket head cap screw M3 × 12
S13	80900318	Spring washer M3
S14	80900310	Flat washer M3
S15	80746406	Large round head phillips screw M4 × 6
S16	80813412	Hexagon socket head cap screw M4 × 12

Item	Stock Number	Part Number
S17	80880404	Hexagon socket set screw M4 × 4

07 Thread Tension Base - Magnetic

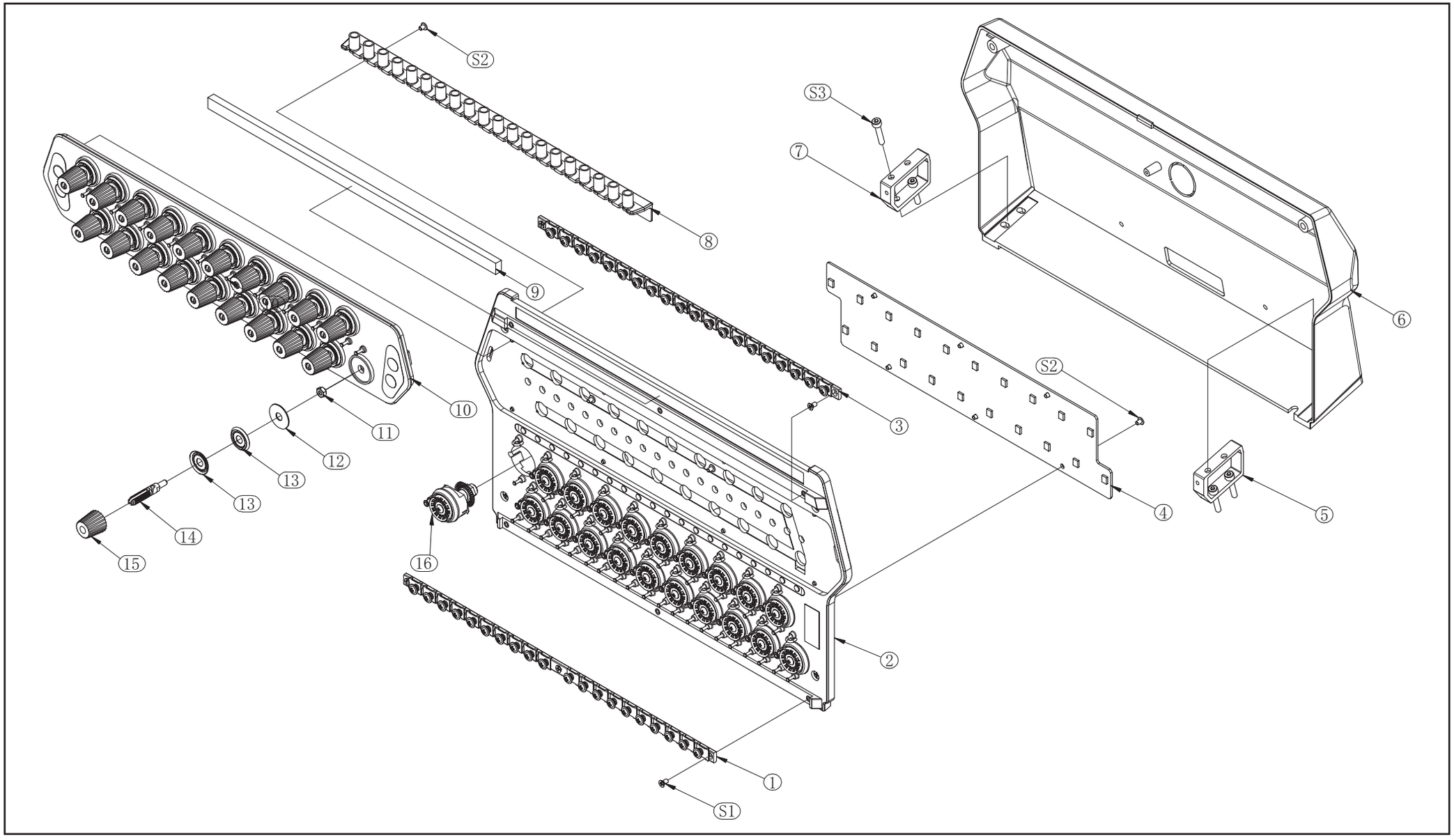

07 Thread Tension Base - Magnetic

Item	Stock Number	Part Number
1	7222200106	Thread course strip module - lower - 21N
1	7222150101	Thread course strip module - lower - 15N
2	7222200107	Thread tension base panel - 21N
2	7222150102	Thread tension base panel - 15N
3	7222200108	Thread course strip module - upper - 21N
3	7222150103	Thread course strip module - upper - 15N
4	7501061134	Thread break detection board - hall - 20N
4	7501061132	Thread break detection board - hall - 15N
5	7222200132	Bracket - R - 20N thread tension base
5	7222150142	Bracket - R - 15N thread tension base
6	7222200103	Thread tension base rear cover - 20N
6	7222150104	Thread tension base rear cover - 15N
7	7222200131	Bracket - L - 20N thread tension base
7	7222150141	Bracket - L -15N thread tension base
8	7222200105	Thread course bracket - upper - 21N - magnetic
8	7222150107	Thread course bracket - upper - 15N - magnetic

Item	Stock Number	Part Number
9	7222200109	Felt - thread tension base – 20N
9	7222150105	Felt - thread tension base – 15N
10	7222200102	Adjusting nut panel - 21N
10	7222150106	Adjusting nut panel - 15N
11	80900432	M4 lock nut
12	3006140114	Felt - tensioner
13	72210702	Press piece
14	72210701	Tension bolt - small knob - DY
15	72210705	Adjusting knob - small knob - DY
16	7222200110	Break thread base - magnetic
S1	80860326	M3 × 6 flat head philips screw
S2	80742305	M3 × 5 flanged pan head phillips screw
S3	80813420	M4 × 20 cylindrical head hexagon socket screw

08 Needle Bar Case

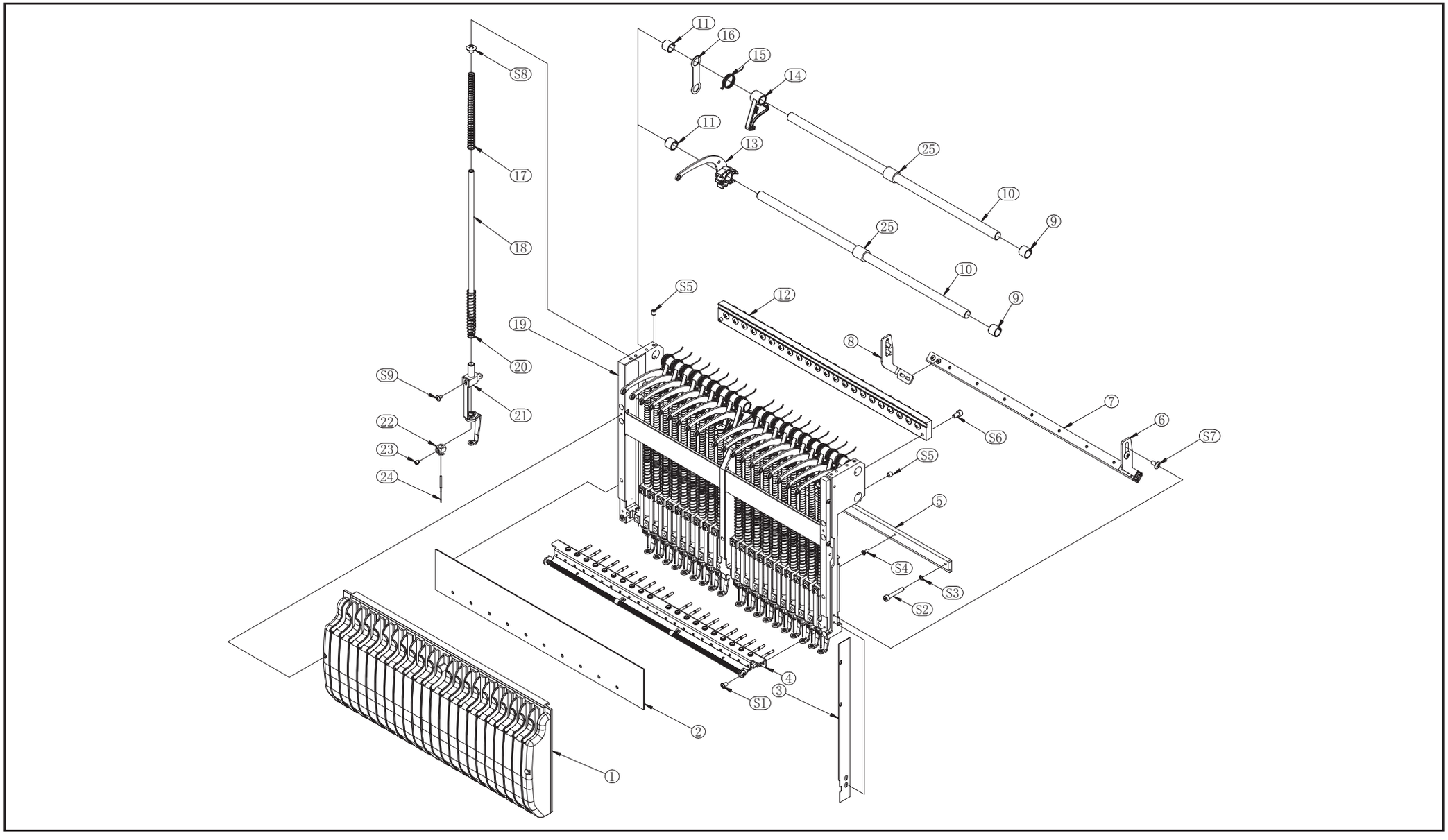

08 Needle Bar Case

Item	Stock Number	Part Number
1	7222200260	Middle thread course assembly - 21N
1	7222150260	Middle thread course assembly - 15N
2	03081326-PY	Needle bar lower panel-upper thread lock - 21N
2	01221335-PY	Needle bar lower panel-upper thread lock - 15N
3	03090722	Mt side pressing plate - LED - 2T
4	03112160	Upper thread holder assembly - ceramic bar type - 21N
4	3111560	Upper thread holder assembly - ceramic bar type - 15N
5	7241010123	Lower guide rail - RP - 21
5	03081122	Lower guide rail – DT - 15
6	72100121VA	Mounting bracket - upper thread clamp RD - R
7	72100190-21	Upper thread clamp assemably - RD - 21N
7	72100180-15	Upper thread clamp assemably - RD - 15N
8	72100122VA	Mounting bracket - upper thread clamp RD - L
9	3081511	Take - up shaft block - 10
9	3081507	Take - up shaft block - 17
10	72100206-20	Take - up lever shaft -- D10 × 340

Item	Stock Number	Part Number
10	01221533	Take - up lever shaft — 15N
11	03081508AA	Take - up shaft block - 15 - 20N
11	03081505	Take - up shaft block - 15
12	03081222	Color change plate assembly - 21N
12	03081215VA	Color change plate-shaft style - 15
13	72100201	Take - up lever - RD - 01
13	72011003	Take - up lever with white ceramic bush - integrated - self - locking
14	72100202	Self - buckling part - RD - 01
14	72011010	Stopper hook
15	72100205	Self-buckling spring - RD - 01
15	03081503VA	Positioning block torsion spring
16	72100203	Separator plate - RD - 01
17	03080102	Needle bar spring - p
18	03080160-02	Needle bar - 217 - hollow alloy steel
19	03081120	Needle bar case - 21N
19	03081115VA	Needle bar case – 15N - LED

08 Needle Bar Case

Item	Stock Number	Part Number
20	03080108	Presser foot spring
21	03080165	Adjustable presser foot assembly
22	01222194	Needle clamp
23	01222183AA	Needle clamp screw - hex socket
24	80621111	Needle - DBXK 5 - 11
25	72100207-15	Opening retaining ring 10 × 12 × 15
S1	80746408	M4×8 round head phillips screw
S2	80810425	Cylindrical head hexagon socket screw M4 × 25
S3	80900418	M4 spring washer
S4	80860328	M3 × 8 flat head philips screw
S5	80880506	M5 × 6 hexagon socket set screw
S6	80813408	M4 × 8 cylindrical head socket screw
S7	80746408	M4 × 8 round head phillips screw
S8	80746506	M5 × 6 round head phillips screw
S9	80746305	M3 × 5 round head phillips screw

Item	Stock Number	Part Number

09 Panel Support

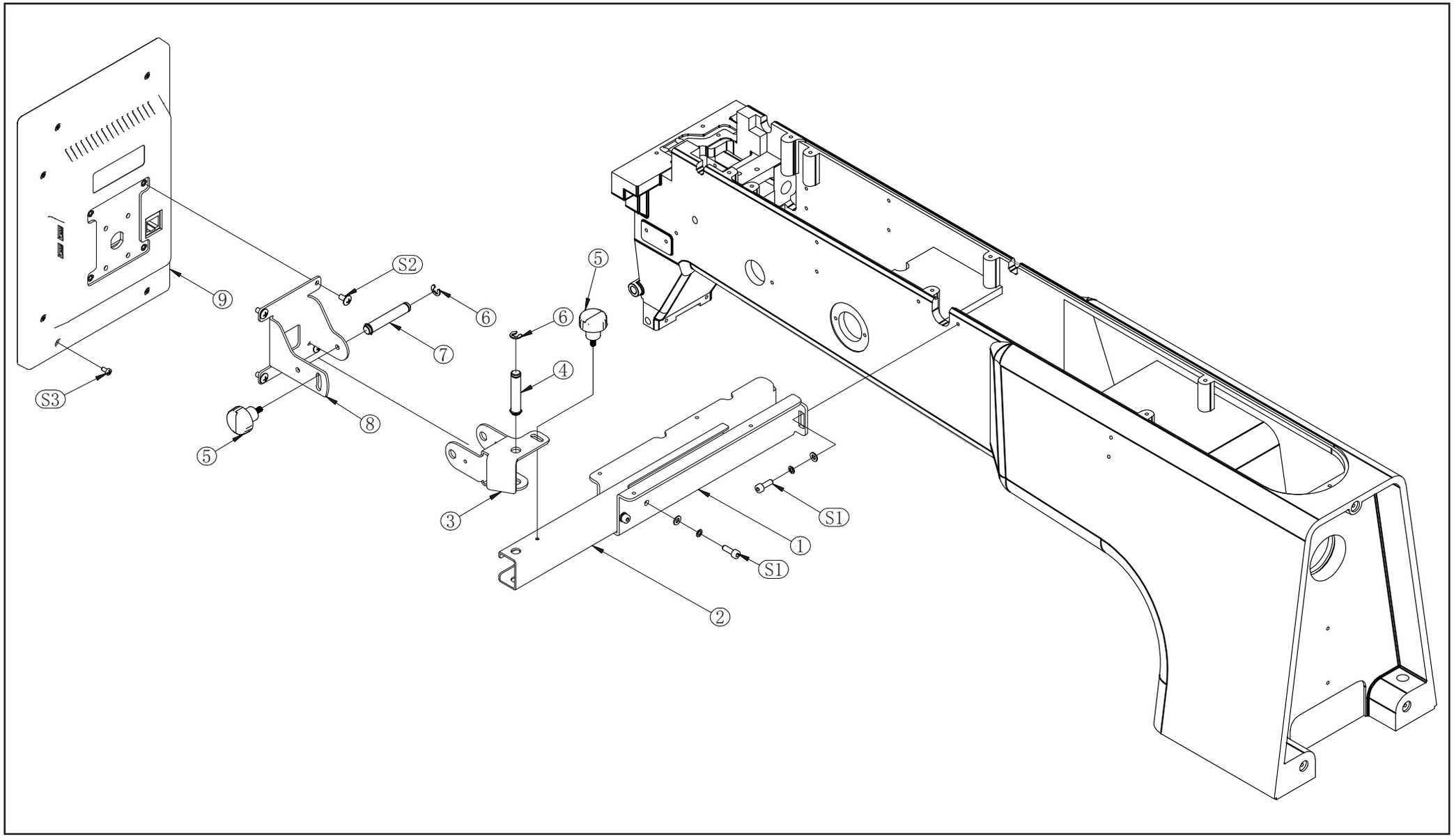

09 Panel Support

Item	Stock Number	Part Number
1	3005044201	Bracket- control panel-smp
2	03044222	Bracket B - control panel
3	3006092103	Bracket C - control panel
4	3006092111	Pin A - control panel bracket
5	3006092121	Rubber head screw
6	80030571	E type outer circlip - 5
7	3006092112	Pin B - control panel bracket
8	3006092104AA	Bracket D - 10S control panel
9	7501011061	10S control panel
S1	80813471	M4 × 12 hexagon socket head cap screw with spring washer and flat washer
S2	80746408	M4 × 8 round head phillips screw
S3	80740306	M3 × 6 small round head phillips screw

Item	Stock Number	Part Number

10 Thread Plate and Thread Stand

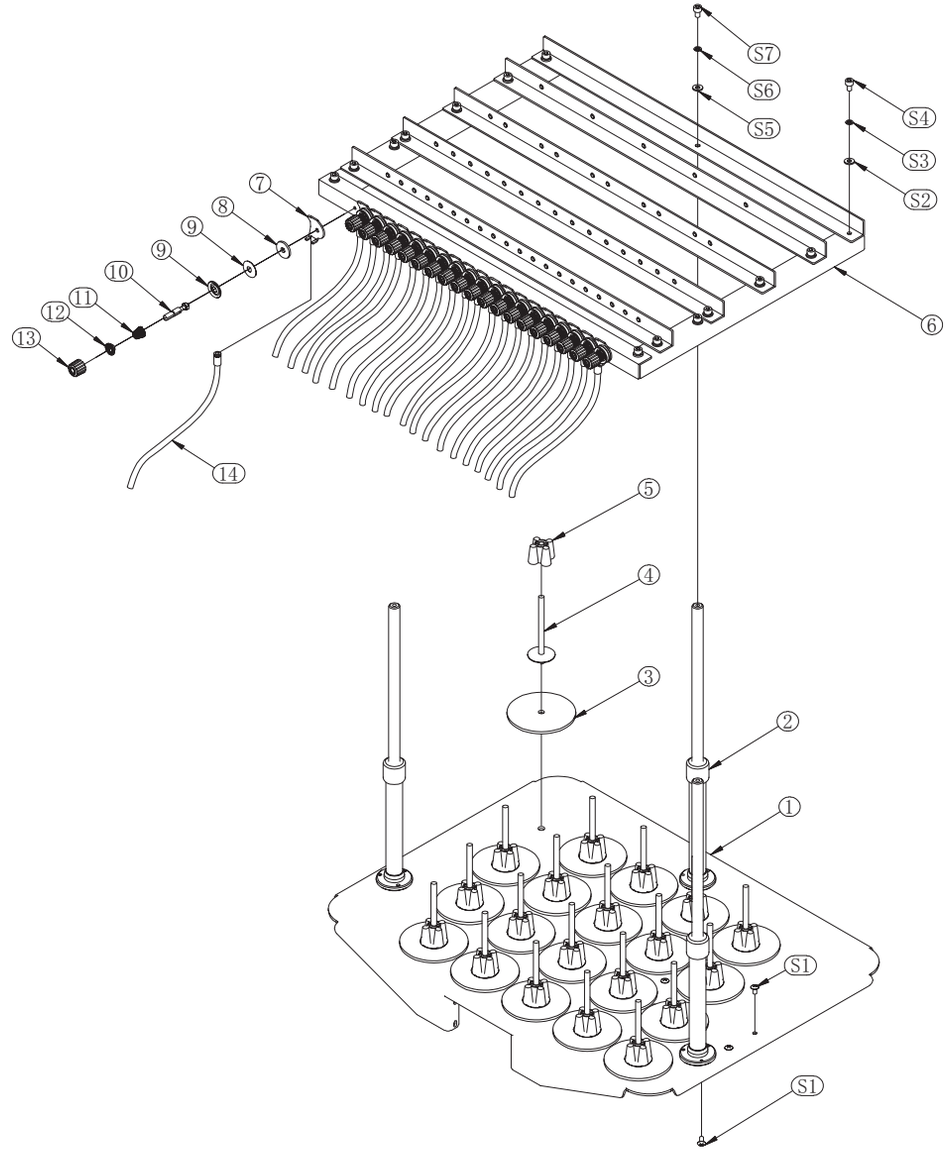

10 Thread Plate and Thread Stand

Item	Stock Number	Part Number
1	3005044102-PY	Thread plate - 20N
1	3005044103-PY	Thread plate - 15N
2	03044152AB	Lifting stand - aluminum alloy
3	80211009VA	Thread plate pad
4	80211007AA	Thread spool pole
5	80211010	Copper wire positioning bushing
6	3005044104	Thread stand - 20N -SMP
6	3005044101	Thread stand - 15N - SMP
7	03141001	Thread guide plate - wheel
8	80211104	Felt gasket
9	03144202	Thread pressing piece - wheel
10	03144208	Knob pole - wheel
11	03144209	Tension spring – wheel
12	03044155	Locking washer
13	03144207	Tension knob - wheel
14	03044361	Thread tube

Item	Stock Number	Part Number
S1	80746408	M4 × 8 round head phillips screw
S2	80900401	M4 flat washer
S3	80900418	M4 spring washer
S4	80810408	M4 × 8 cylindrical head hexagon socket screw
S5	80900501	M5 flat washer
S6	80900518	M5 spring washer
S7	80813508	Cylindrical head hexagon socket screw M5 × 8

11 Frame

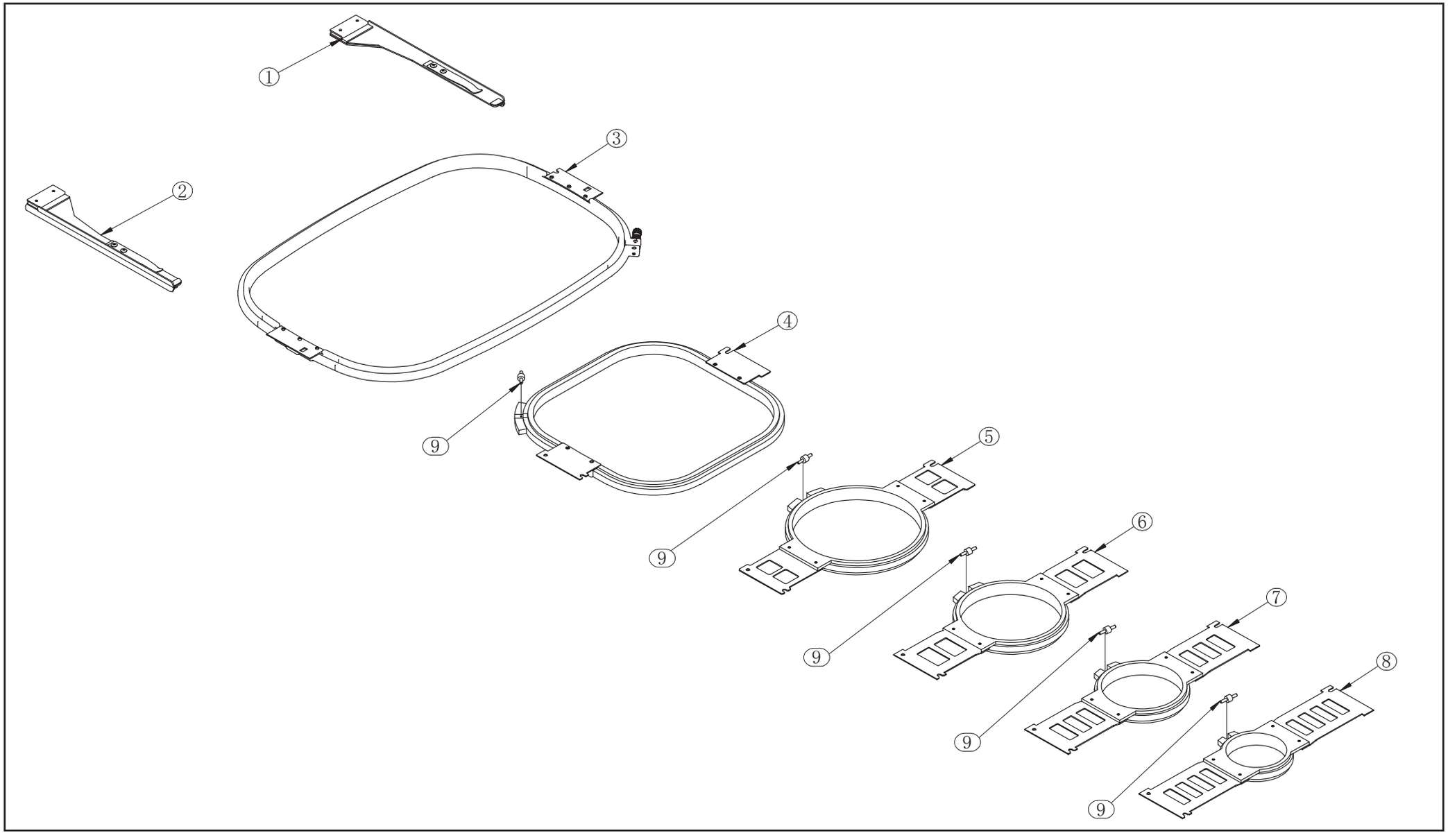

11 Frame

Item	Stock Number	Part Number
1	03100291AA	Frame bracket module - R - SMP
2	03100292AA	Frame bracket module - L - SMP
3	03173691VA	Hoop - 540 × 360 - 425 C
4	02540681CB	Hoop 290
5	02540581CB	Hoop 190
6	02540481CB	Hoop 150
7	02540381CB	Hoop 120
8	02540281CB	Hoop 90
9	02540105	Pin screw

Item	Stock Number	Part Number

12 Electrical Part - 10S -Control Panel

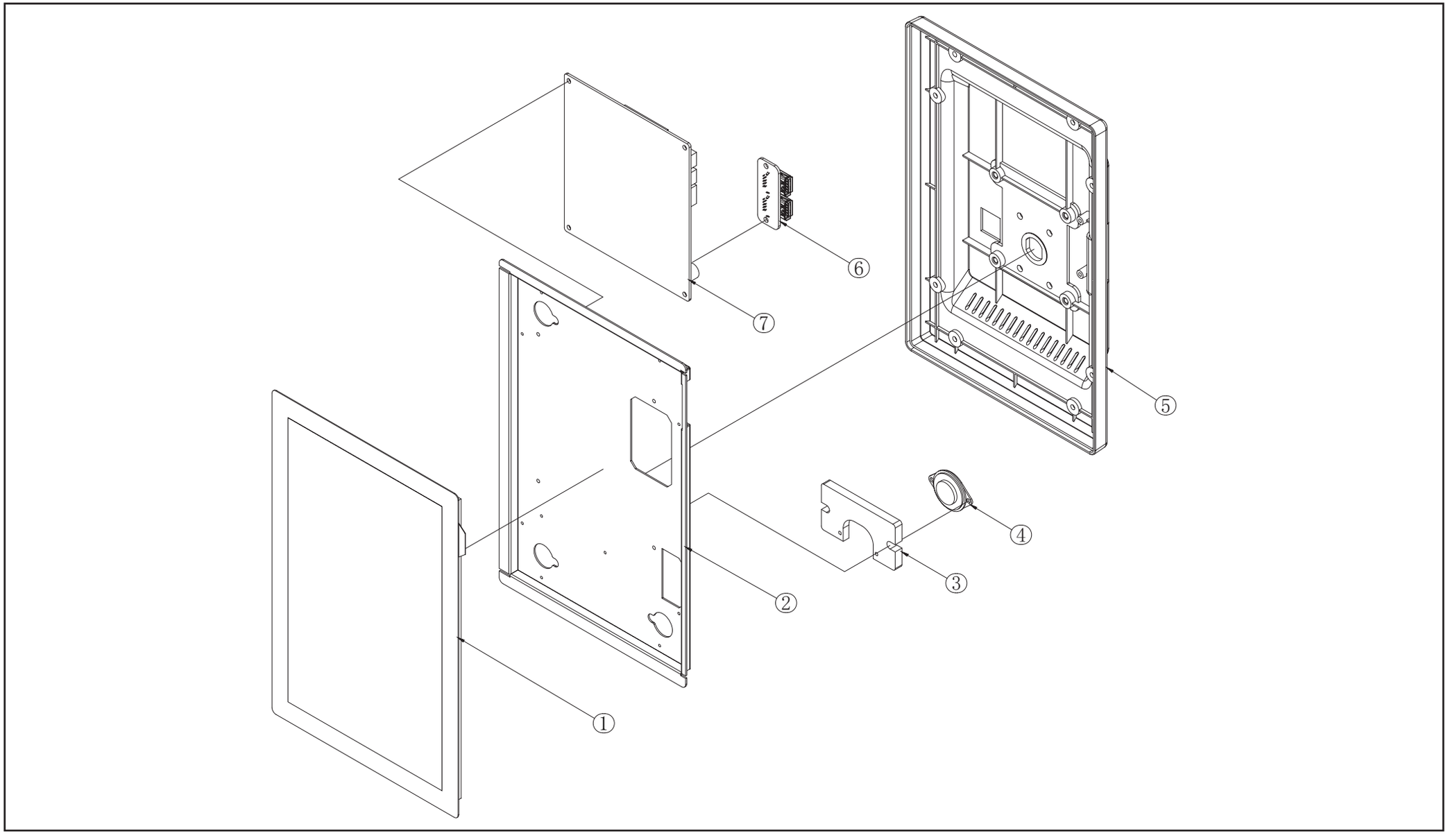

12 Electrical Part - 10S - Control Panel

Item	Stock Number	Part Number
1	7501011004	Screen
2	7501011022	Support plate - touch screen
3	7501011023	Mounting base - wireless - 10S
4	7501011005	Speaker
5	7501011021	Back cover – 10Scontrol panel
6	7501011003	USB interface board
7	7501011002	Main board of 10S control panel

Item	Stock Number	Part Number

12 Electrical Part

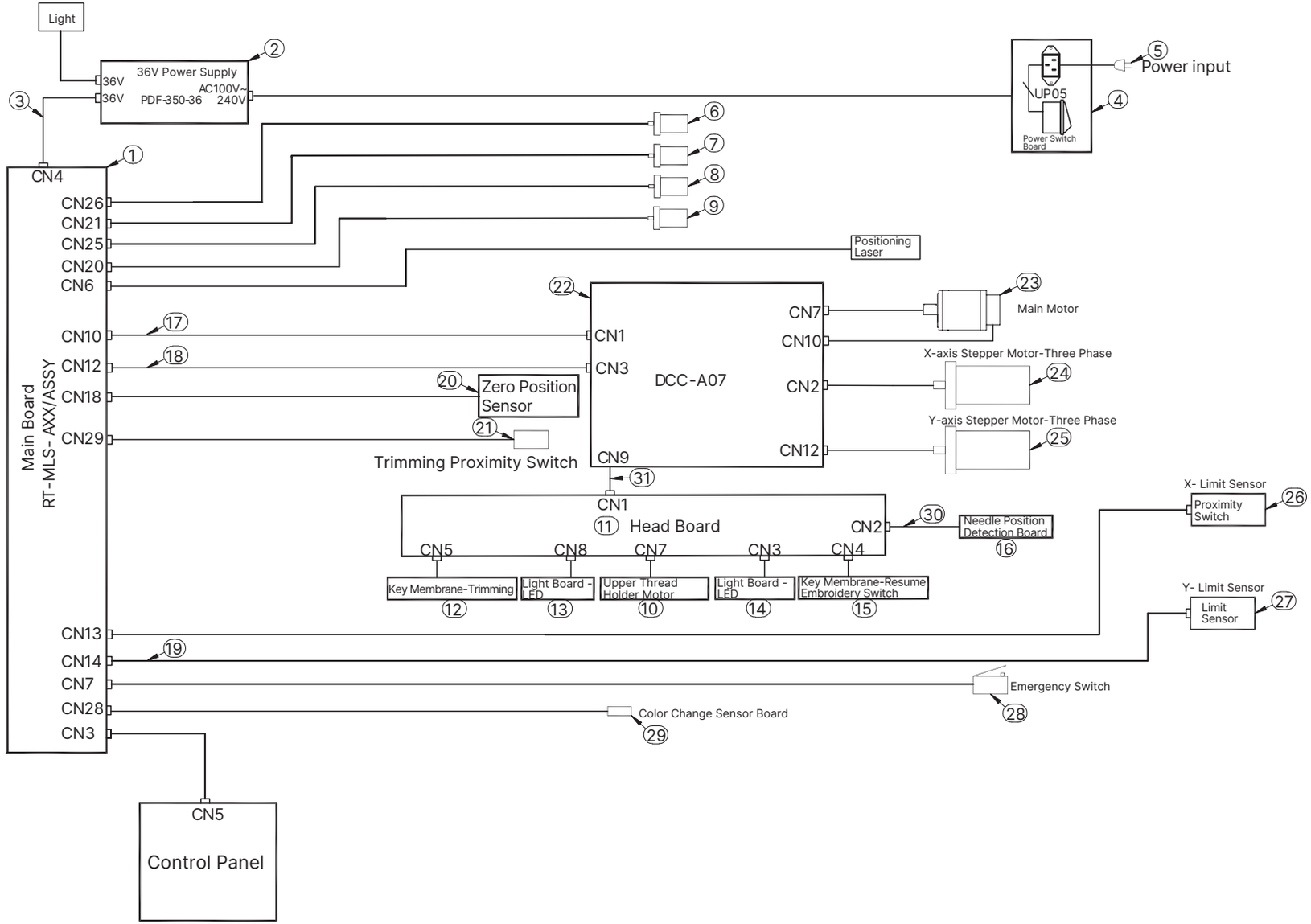

12 Electrical Part

Item	Stock Number	Part Number
1	7501020102	Main board
2	80380641	Power supply
3	7501210302	Power cable from main board to power supply
4	3006153101B	Input socket
5	80390101	Us standard power cord JL003 - UL
5	80390102	Eu standard power cord - JL301
5	80390103	Uk standard power cordBS
5	80390105	National standard power cord RVVZ - 3P - 2
6	80304262	Stepper motor 42 H 62 - D5
7	3006041401	Jumping motor
8	80304263VA	Stepper motor 42 H 62 - D5
9	80304213	Jumping motor 42 BYGH 5201 - 01
10	80303501	Stepper motor - two phase 35
11	7501061134	Thread break detection board - hall - 20N
11	7501061132	Thread break detection board - hall - 15N
12	7501100131	Key membrane - trimming

Item	Stock Number	Part Number
12	7501100131AA	Key membrane - trimming
13	7501100111	Light board - LED - 20N
13	7501060115	Light board - LED -15N
14	7501061133	Light board - RFID - 20N
14	7501061131	Light board - RFID - 15N
15	7501100130	Key membrane- quick resume embroidery
15	7501100130AA	Key membrane - quick resume embroidery - chinese
16	7501040123	Needle position detection board - 21N
16	7501040124	Needle position detection board -15N
17	7501210102	Power cable - main board – 3 in 1 driver
18	7501210103	Signal cable - main board – 3 in 1 driver
19	7501210108AA	Signal cable - main board - Y limit sensor
20	7501040113	Zero position sensor
21	80333601AA	Micro proximity switch - NPN
22	7501030163	Stepper closed - loop driver – 3 in 1
23	80310724	Servo motor - 70 SFA 90 - 340 - 1000Z

12 Electrical Part

Item	Stock Number	Part Number
24	80306101	Stepper closed - loop motor - 60 H 90 -S8
25	8030008703	Stepper closed - loop motor - 86
26	80333611	Micro proximity switch - NPN
27	7501040112AA	Sensor board-limit position YB - W
28	80350401	Emergency button - LA16
29	7501040109	Sensor board- half turn
30	7501210224	Signal cable - head board - needle position board
31	7501210223CA	Can communication cable - 3 in 1 driver - head board

Item	Stock Number	Part Number