ricoma
THINK BEYOND

PM-10S Parts Book

(2026.05.19)

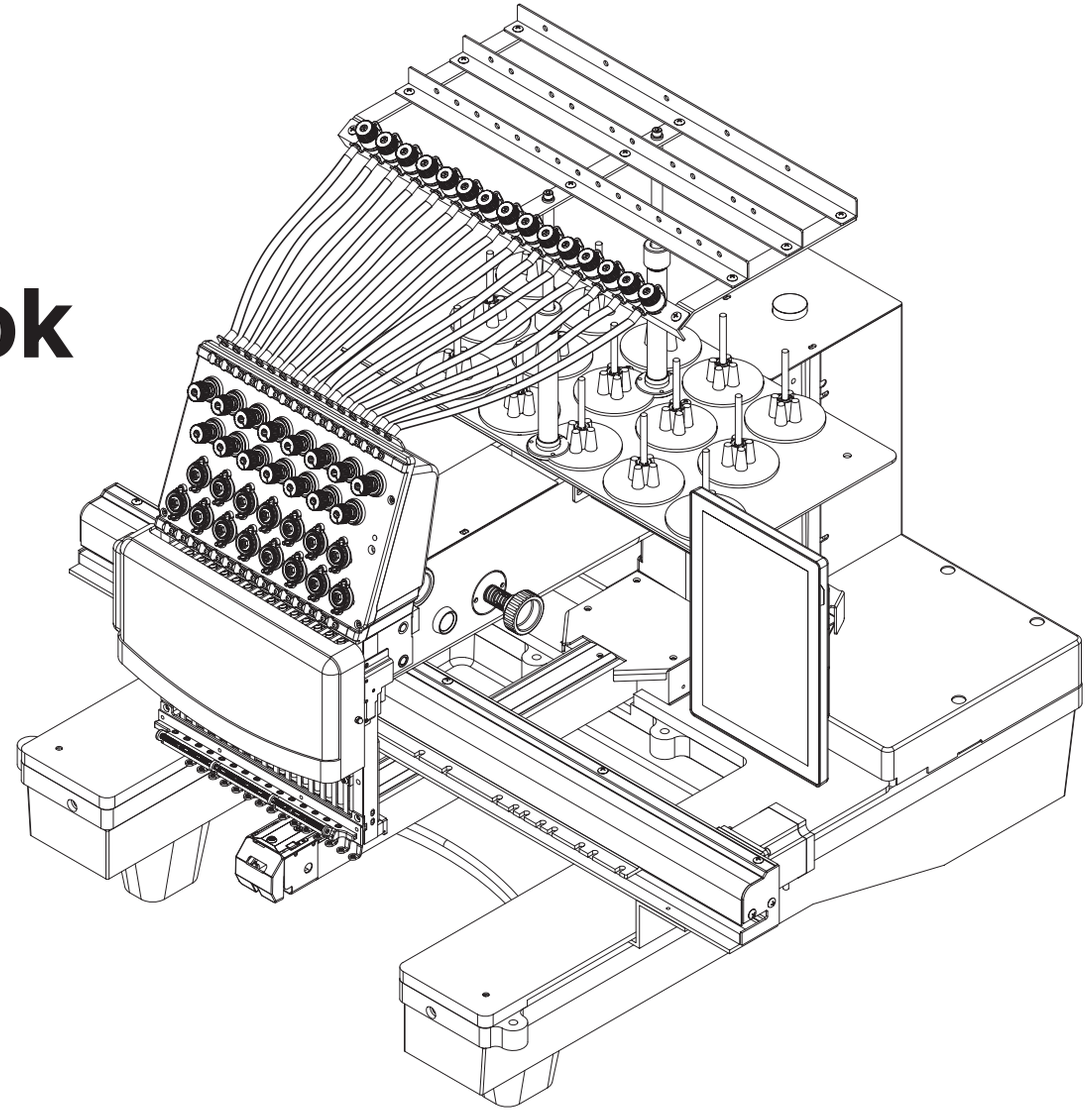

ricoma
THINK BEYOND

INDEX

01 Cover Base 01
02 Machine Head 03
03 Hook and Jump 10
04 Shuttle Box. 13
05 Y-axis Drive System 18
06 X-Axis Drive System 22
07 Thread Tension Base-Only Wheel. 25
07 Thread Tension Base Wheel+Spring. 28
08 Needle Bar Case 31
09 Panel Support 36
10 Thread Stand 38
11 Frame. 40
12 10s Control Panel. 42
12 Electrical Part-10s-Wheel+Spring 44
12 Electrical Part-10s-Only Wheel 48

01 Cover Base

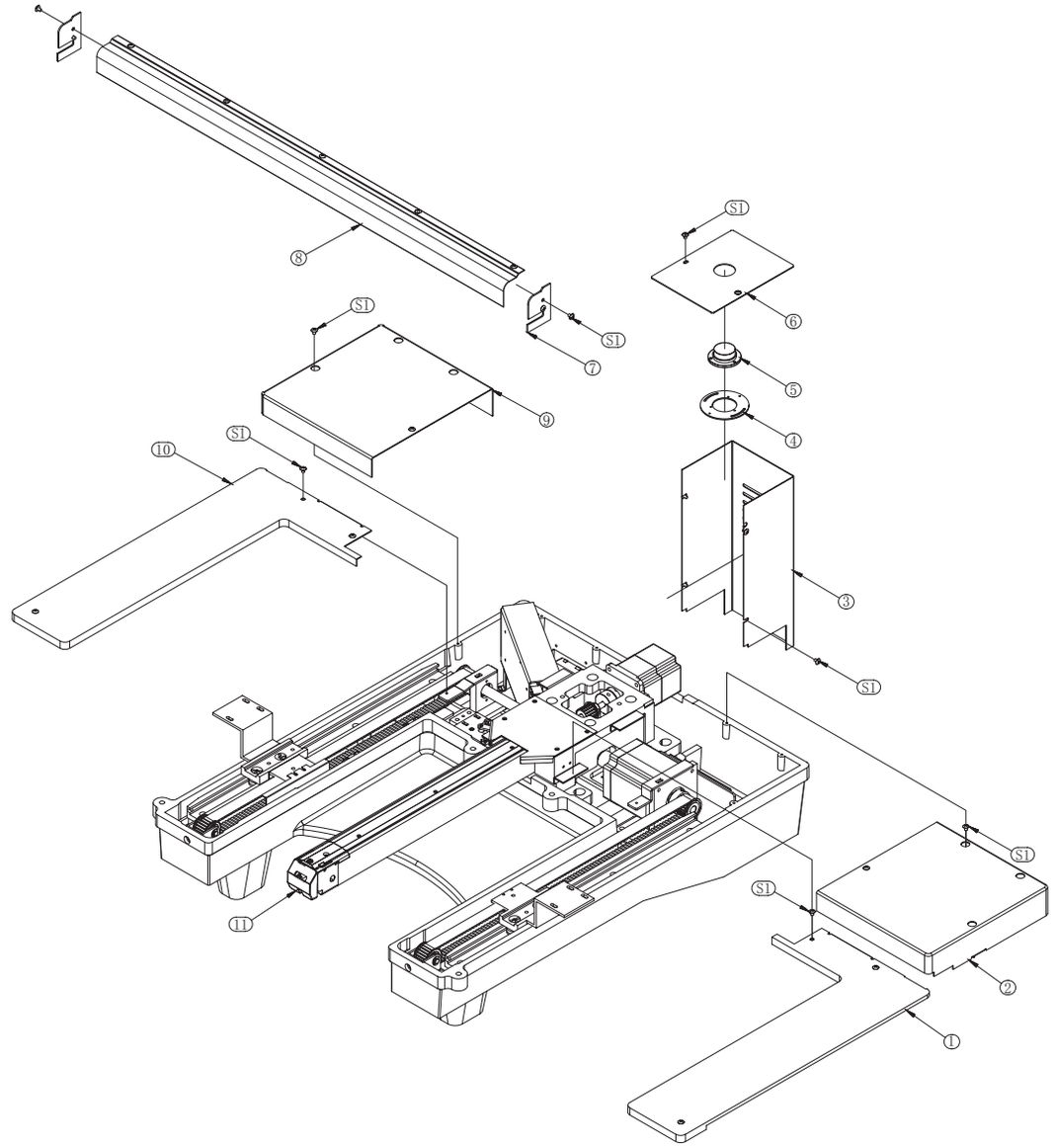

01 Cover Base

Item	Stock Number	Part Number
1	3004010120-PY	Base Front Cover-Right
2	3004010118-PY	Base Rear Cover-Right
3	03040132-PY	Arm-Rear Cover
4	03040134	Installation Base-Plate Level
5	03040135	Plate Level
6	03040133--PY	Rear Upper Cover-Plate Level
7	03100117	Drive Cover X
8	3003100117	Drive Cover X-800
9	3004010119-PY	Base Rear Cover-Left
10	3004010121-PY	Base Front Cover-Left
11	02101622	Front Cover-SR-C
S1	80746406	Round Head Phillips M4 X 6 Screw

02 Machine Head

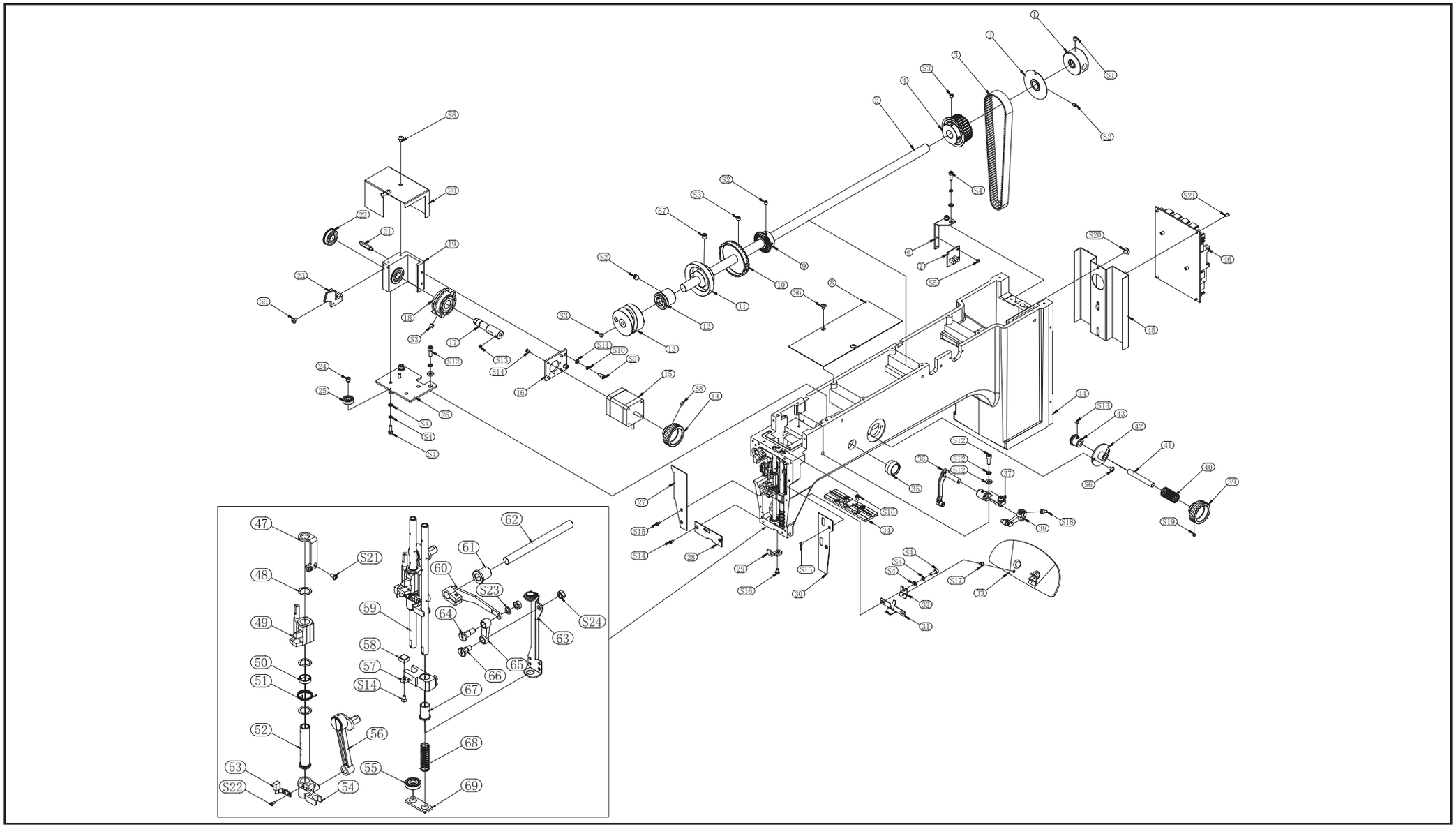

02 Machine Head

Item	Stock Number	Part Number
1	03041203VA	Main Shaft Rear Bushing
2	03041207VA	Zero Position Baffle
3	80025506	Timing Belt 525-S5m-16
4	80025601	Pulley-32-S5m-20-15
5	3004041201	Upper Shaft-P400
6	03041208	Zero Position Sensor Bracket
7	7501040113	Sensor Board-Zero Position
8	3004010116	Head Cover-Upper
9	01030136	Large Shaft Gear-36t-D15
10	03041211	Main Shaft Dial
11	03040404	Presser Foot Cam
12	03041202	Main Shaft Front Bushing
13	03040203	Arm Cam Set
14	03040511RA	Color Change Handle
15	80304262	Stepper Motor-Two Phase-Dual Shaft, 42H62-D5
16	03040701	Head Board

02 Machine Head

Item	Stock Number	Part Number
17	03040528VA	Color Changing Cam Shaft-P
18	01293812	Color Changing Cam - Double Track – Card Type
19	03040540	Color Changing Bearing Base-P
20	3011100342-PY	Color Change Cover - Dual Bearing 57
21	03040509	Potentiometer Fixed Bolt
22	80031224	Roller Bearing F 12 X 28 X 8
23	01293851	Thread Break Detection Sensor Bracket
24	03040507	Changing Color Shaft Pin
25	80030722	19-7-6 Bearing
26	03040501BA	Color Change Cam Base Plate -TC
27	03040125	Front Head-Left Cover
28	03040123	Front Head-Lower Cover
29	03040121CA	Positioning Hook-Lower Guide Rail-Single Head
30	03040124	Front Head-Right Cover
31	03040631	Hook Guide Plate
32	03040154	Machine Head Lower Baffle Bracket

02 Machine Head

Item	Stock Number	Part Number
33	03040151	Machine Head Lower Baffle
34	03041108CA	Take-Up Guide Plate-Aluminum-104
35	03041212	Dial Viewer
36	03041193	Take-up Lever Main Connecting Rod Components
37	03041101	Take-up Level Base
38	03041181	Take-up Connection Rod
39	03041304	Adjustment Handle-Black
40	03041303	Adjustment Handle Spring
41	03041302	Adjustment Handle Shaft
42	03041301	Handle Bushing
43	01030137	Small Shaft Gear
44	03040101BA	Machine Head-P
45	03150707RT	Multifunction Board Mounting Plate-RT7P
46	7501020102	Multifunction Board+DSP
47	03040303	Needle Bar Reciprocator Bracket
48	03040309	Driver Block Washer

02 Machine Head

Item	Stock Number	Part Number
49	03040305	Reciprocator
50	03040304	Spring Positioning Bushing-V2
51	03040306V2	Reciprocator Resetting Spring-V2
52	03040308	Needle Bar Driver Bushing
53	03040323	Reciprocator Limit Bracket
54	03040307	Needle Bar Reciprocator
55	80037921	Bearing-7.24-17-4
56	03040292	Needle Bar Driving Set
57	03040424VA	Presser Foot Reciprocator
58	01212201	Presser Foot Buffer Cushion
59	03040351	Head Drive Shaft-P
60	03040430	Presser Foot Driving Connection Rod
61	80030803	Sleeve-8-12
62	03040431	Presser Foot Driving Shaft
63	03040421	Presser Foot Sliding Bracket
64	03040411	Connection Rod Pin-up

02 Machine Head

Item	Stock Number	Part Number
65	03040403	Presser Foot Connection Rod
66	03040412	Connection Rod Pin-Down
67	03040423	Driving Shaft Bushing -B
68	03040425	Presser Foot Guide Spring
69	03040111	Oil Felt
S1	80880608	M6×8 Hexagon Socket Set Screw
S2	80880506	M5*6 Hexagon Socket Set Screw-Black
S3	80880606	M6×6 Hexagon Socket Set Screw-Black
S4	80813471	M4 × 12 Cylindrical Head Socket Head Cap Screw + Spring Washer + Flat Washer
S5	80742304	M3 × 4 Flanged Pan Head Phillips Screw
S6	80746406	M4 × 6 Round Head Phillips Screws
S7	80880808	M8 × 8 Hexagon Socket Set Screw -Black
S8	80880406	M4 × 6 Hexagon Socket Set Screw -Black
S9	80813408	M4 × 8 Cylindrical Head Hexagon Socket Screw- Stainless
S10	80900418	M4 Spring Washer- Stainless
S11	80900403	M4 Flat Washer- Stainless

02 Machine Head

Item	Stock Number	Part Number
S12	80813581	M5 × 14 Hexagon Socket Head Cap Screw with Spring Washer and Flat Washer
S13	80880504	M5 × 4 Hexagon Socket Set Screw -Black
S14	80860326	M3 × 6 Flat Head Philips Screw- Stainless
S15	80746306	M3 × 6 Round Head Phillips Screws
S16	80740406	M4 × 6 Small Round Head Phillips Screws
S17	80860406	M4 × 6 Flat Head Philips Screw- Stainless
S18	80810410	M4 × 10 Cylindrical Head Hexagon Socket Screw- Black
S19	80880404	M4 × 4 Hexagon Socket Set Screw -Black
S20	80746506	M5 × 6 Round Head Phillips Screws
S21	80742306	M3 × 6 Flanged Pan Head Phillips Screw
S22	80740204	M2 × 4 Small Round Head Phillips Screws
S23	80900518	M5 Spring Washer- Stainless
S24	80900528	M5 Nut- Stainless

03 Hook and Jump

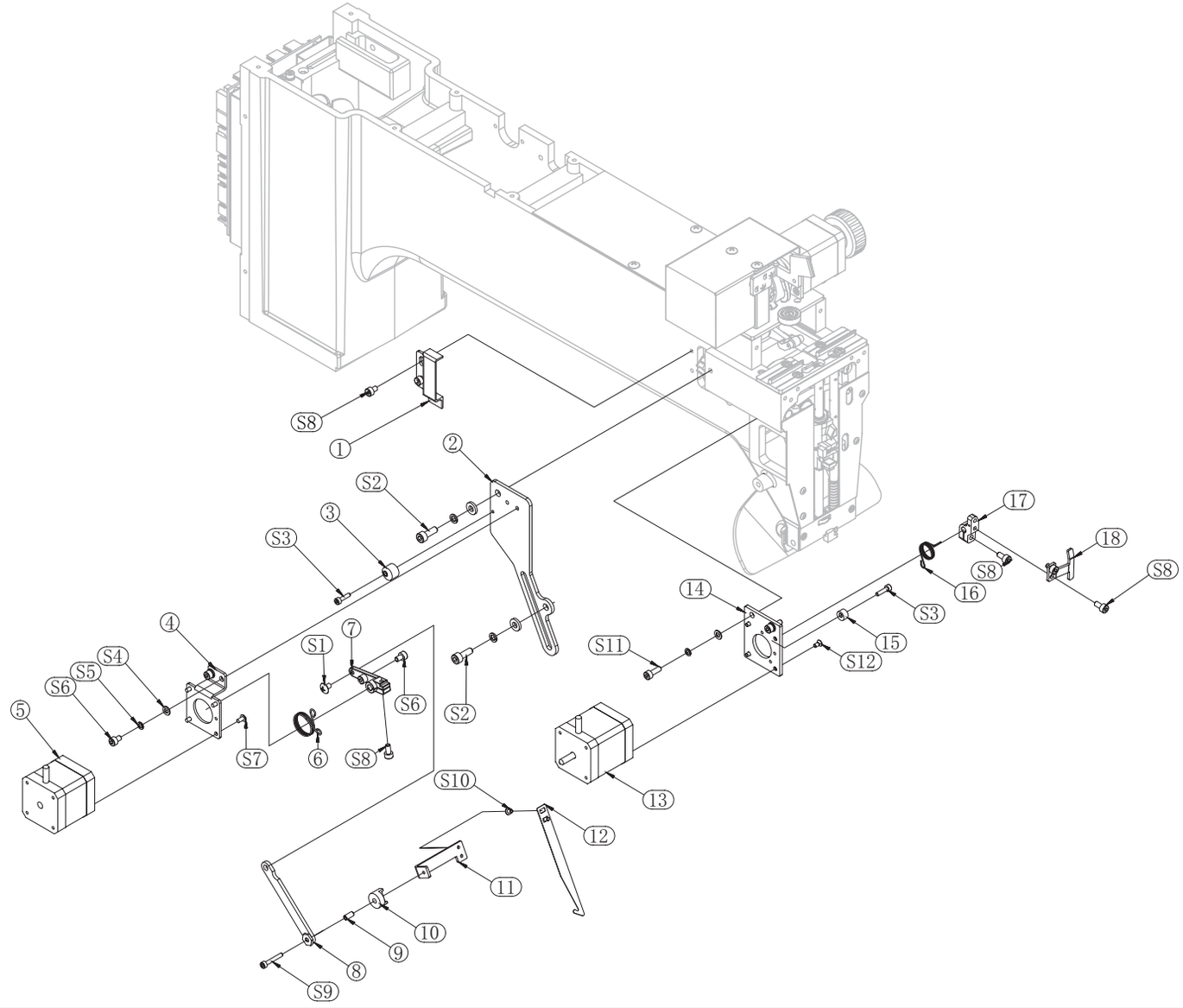

03 Hook and Jump

Item	Stock Number	Part Number
1	03040141	Head Left Side Cover
2	03040601	Hook Plate
3	03040605	Silencer Block Ø12 × 6-M3
4	03040602	Hook Motor Base
5	80304263VA	Stepper Motor-Two Phase-Dual Shaft, 42H62-D5
6	03040604	Driving Arm Resetting Spring
7	03040603	Hook Driving Arm
8	03040606	Hook Connection Bar
9	03040609	Positioning Bushing
10	03040607	Hook Positioning Block
11	03040610	Hook Connection Block
12	03040611AA	Thread Hook
13	80304213	Jumping Motor 42BYGH5201-01
14	03040701	Motor Mounting Plate
15	03040706	Silencer Block
16	03040705	Jumping Spring

03 Hook and Jump

Item	Stock Number	Part Number
17	03040702	Head Jumping Part
18	03040703	Jumping Bar Bracket
S1	80746406	M4 × 6 Round Head Phillips Screws
S2	80813581	M5 × 14 Hexagon Socket Head Cap Screw with Spring Washer and Flat Washer
S3	80813312	M3 × 12 Cylindrical Head Hexagon Socket Screw-Stainless
S4	80900403	M4 Flat Washer-Stainless
S5	80900418	M4 Spring Washer-Stainless
S6	80813406	M4 × 6 Cylindrical Head Hexagon Socket Screw-Stainless
S7	80746306	M3 × 6 Round Head Phillips Screws
S8	80813408	M4 × 8 Cylindrical Head Hexagon Socket Screw-Stainless
S9	80810320	M3 × 20 Cylindrical Head Hexagon Socket Screw-Black
S10	80742304	M3 × 4 Flanged Pan Head Phillips Screw
S11	80813471	M4 × 12 Hexagon Socket Head Cap Screw with Spring Washer and Flat Washer
S12	80860326	M3 × 6 Flat Head Philips Screw- Stainless

04 Shuttle Box

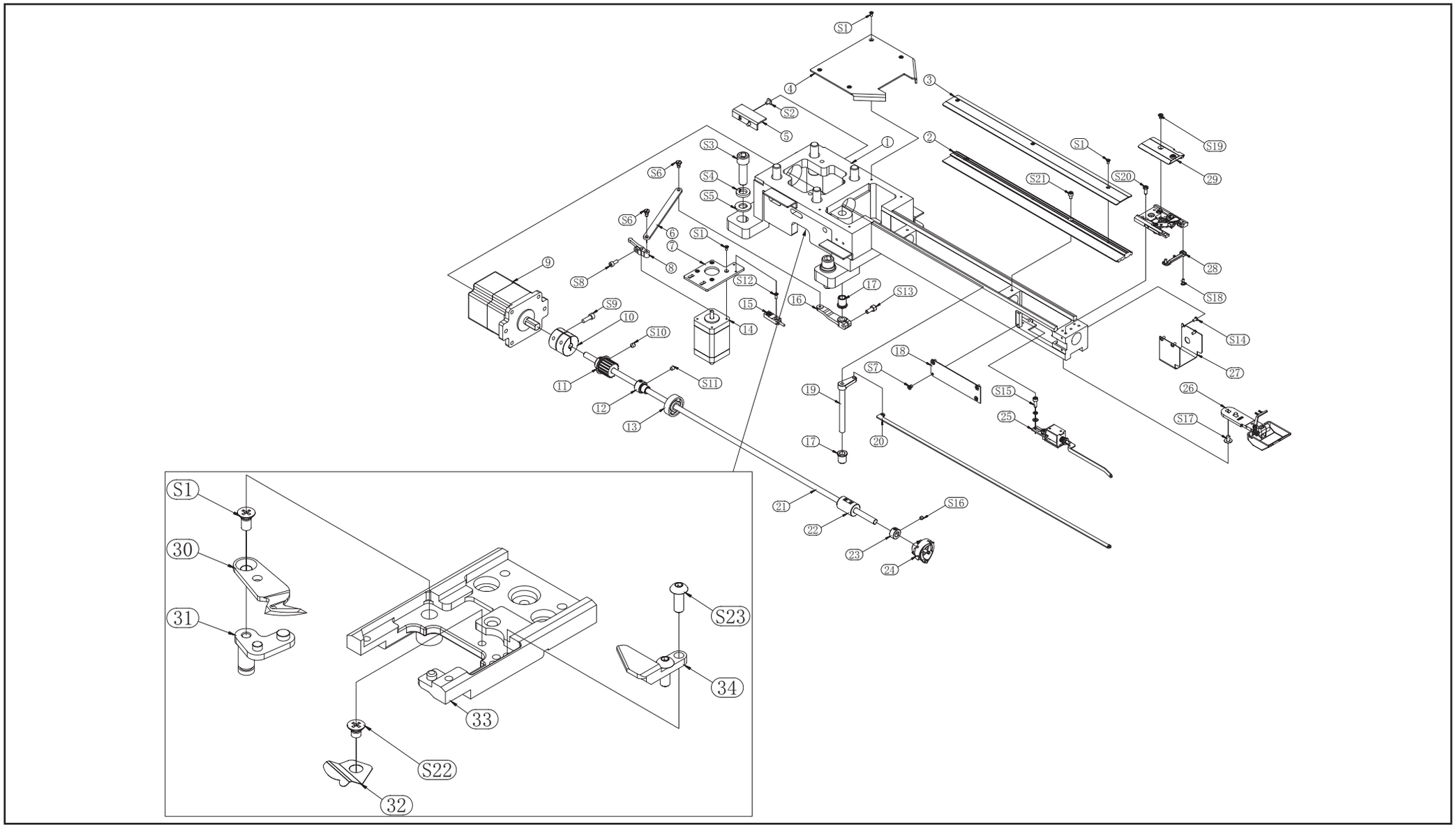

04 Shuttle Box

Item	Stock Number	Part Number
1	3004021101	Shuttle Box-P400
2	3004021103	Support-Shuttle Box Cover
3	3004021102	Shuttle Box Cover
4	3004021104	Shuttle Box Rear Cover
5	03010210	Bracket For Arm Cover
6	03021204	Trimming Connection Rod
7	03021206	Mounting Plate-Trimming Motor-P
8	03021213	Trimming Motor Driving Arm-P
9	80310701BC	Servo Motor-70SF3A60
10	80037912CA	Coupler
11	80025602	Timing Belt S5m-16-20-DTB
12	80037901	Bearing Collar-ID7.94OD12
13	80031222	Deep Groove Ball Bearing 6201ZZ
14	80304263	Stepper Motor -42H4F62-106-02
15	8033361	Micro Proximity Switch--SL-W3MB1
16	03021211	Turning Link Rod For Thread Trimming

04 Shuttle Box

Item	Stock Number	Part Number
17	80030803	Sleeve-8-12
18	03020621	Cover-Picker Solenoid -SR-P
19	03021280	Trimming Drive Bar Set
20	3004021201	Rod -P-SR
21	3004021105	Rotary Hook Shaft-P
22	02101131	Rotary Hook Front Sleeve
23	02010633	Baffle Ring Of Rotary Hook Shaft-SY
24	80620295	Rotary Hook
25	80320230	Picker Solenoid-DC30V
26	02101661	Picker Assembly-SR-C
27	3004021118	Needle Plate Cover-SR-D
28	03021322	Rotary Position Hook-RCM- Short
29	3006021112BA	Needle Plate-EM10+
30	02101231	Movable Knife
31	02101202	Movable Knife Driving Rod
32	02101233	Fixed Knife Shrapnel

04 Shuttle Box

Item	Stock Number	Part Number
33	301215020	Needle Plate Base-SRD-D
34	02101232	Fixed Knife
S1	80860326	M3 × 6 Flat Head Philips Screw- Stainless
S2	80746406	M4 × 6 Round Head Phillips Screws
S3	80811240	M12 × 40 Cylindrical Head Hexagon Socket Screw-Black
S4	80901213	M12 Spring Washer-Black
S5	80901202	M12 Flat Washer
S6	80924212	Shaft Shoulder Screw M4 × 12-5 × 5.5
S7	80860326	M3 × 8 Flat Head Philips Screw- Stainless
S8	80810410	M4 × 10 Cylindrical Head Hexagon Socket Screw-Black
S9	80813516	M5 × 16 Cylindrical Head Hexagon Socket Screw-Stainless
S10	80880606	M6 × 6 Hexagon Socket Set Screw -Black
S11	80880506	M5 × 6 Hexagon Socket Set Screw -Black
S12	80860328	M3 × 8 Flat Head Philips Screw- Stainless
S13	80813512	M5 × 12 Cylindrical Head Hexagon Socket Screw-Stainless
S14	80746306	M3 × 6 Round Head Phillips Screws

04 Shuttle Box

Item	Stock Number	Part Number
S15	80813471	M4 × 12 Cylindrical Head Hexagon Socket Screw+Spring Washer+Flat Washer
S16	80880504	M5 × 4 Hexagon Socket Set Screw -Black
S17	80746508	M5 × 8 Round Head Phillips Screws
S18	80746308	M3 × 8 Round Head Phillips Screws
S19	80860406	M4 × 6 Flat Head Philips Screw- Stainless
S20	80740410	M4 × 10 Small Round Head Phillips Screws
S21	80813406	M4 × 16 Cylindrical Head Hexagon Socket Screw-Stainless
S22	80742304	M3 × 14 Flanged Pan Head Phillips Screw
S23	80760308	M3 × 8-12.9 Pan Head Hexagon Socket Screw-Black

05 Y-axis Drive System

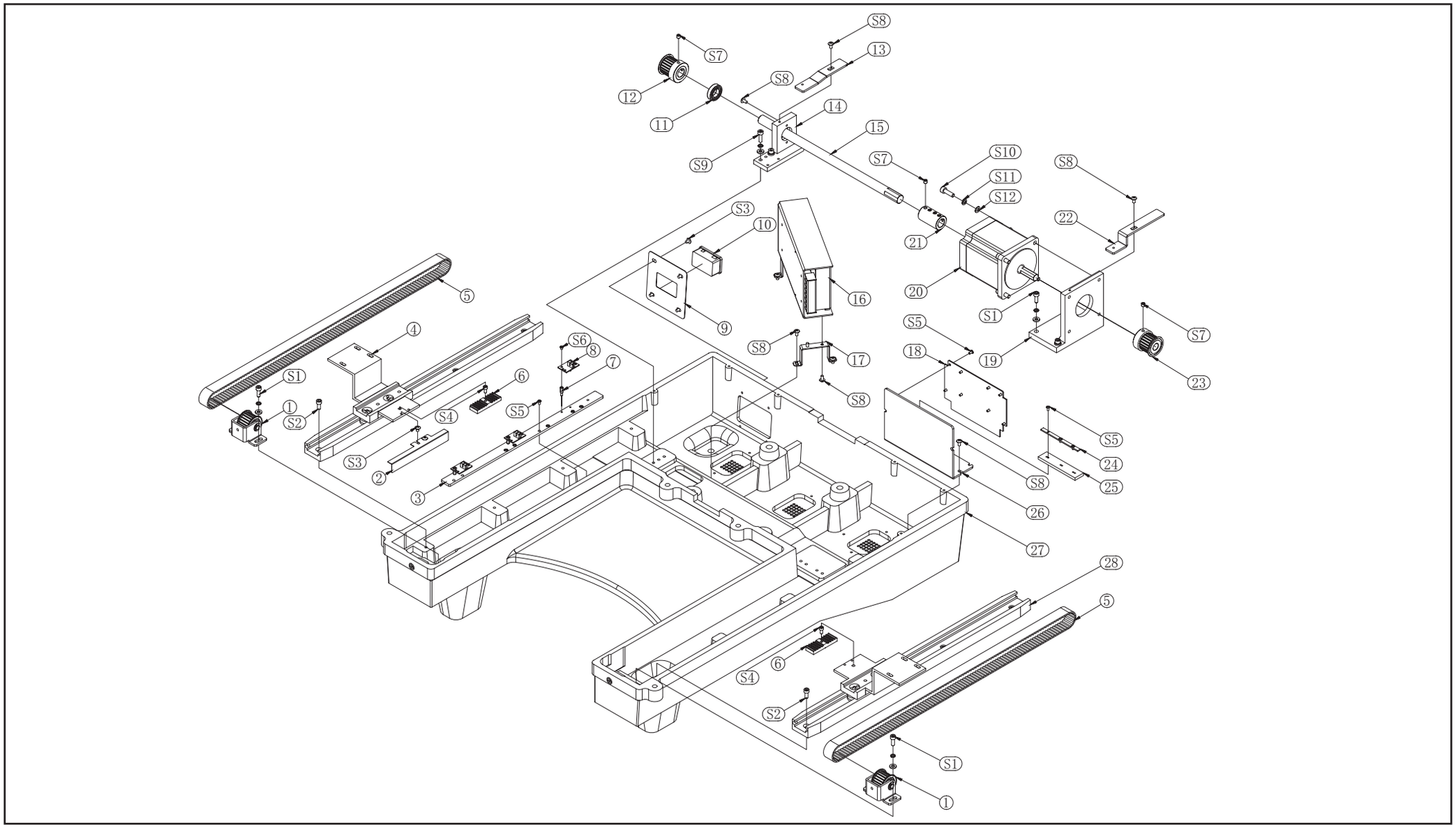

05 Y-axis Drive System

Item	Stock Number	Part Number
1	03105134	Driven Pulley Set-Y
2	3003105116	Limit Photosensitive Plate-Y
3	3004105115	Sensor Board-SWD-Y
4	3004100006	Y43-520-1-Left
5	03105151	Timing Belt-Y-5m-20-1030
6	03105108VA	Gear Platen-Y
7	80922005	Hexagonal Copper Pillar M3 × 10+6
8	7501040111	Sensor Board-Limit Position-XY
9	3004010113	Mounting Plate - Power Switch 2
10	3006153101	Power Switch
11	80031223	Deep Groove Ball Bearing-6902
12	80025266	Pulley-50m-20-22-Hole 15
13	3004010115	Bracket - Front Left Cover - Rear
14	03105122	Bearing Base-Y
15	03105112	Y Driving Shaft- 12
16	80380641	Power Supply

05 Y-axis Drive System

Item	Stock Number	Part Number
17	3003150901	Bracket-Switch Supply-P
18	7501030161	3 In 1 Driver
19	03105121	Motor Base Y86
20	80308630	Stepper Motor-Three Phase-86h98d12f37
21	80031212	Coupler D12-D15
22	3004010117	Fixing Plate - Base Front Cover
23	80025266	Pulley-50m-20-22 Hole-12
24	7501030104	Lever Strip-3 In 1 Driver
25	7501030103	Heat Sink-3 In 1 Driver
26	7501030101	Mounting Plate-3 In 1 Driver
27	3004010112-PY	Machine Base-P400
28	3004100007	Y43-520-1-Right
S1	80813581	M5 × 14 Cylindrical Head Hexagon Socket Screw+Spring Washer+Flat Washer
S2	80810412	M4 × 12 Cylindrical Head Hexagon Socket Screw-Black
S3	80746406	M4 × 6 Round Head Phillips Screws
S4	80813408	M4 × 8 Cylindrical Head Hexagon Socket Screw-Stainless

05 Y-axis Drive System

Item	Stock Number	Part Number
S5	80742306	M3 × 6 Flanged Pan Head Phillips Screw
S6	80742304	M3 × 4 Flanged Pan Head Phillips Screw
S7	80880606	M6 × 6 Hexagon Socket Set Screw -Black
S8	80746408	M4 × 8 Round Head Phillips Screws
S9	80813582	M5 × 16 Cylindrical Head Hexagon Socket Screw+Spring Washer+Flat Washer
S10	80813620	M6 × 20 Cylindrical Head Hexagon Socket Screw-Stainless
S11	80900618	M6 Spring Washer-Stainless
S12	80900611	M6 Flat Washer-Stainless

06 X-Axis Drive System

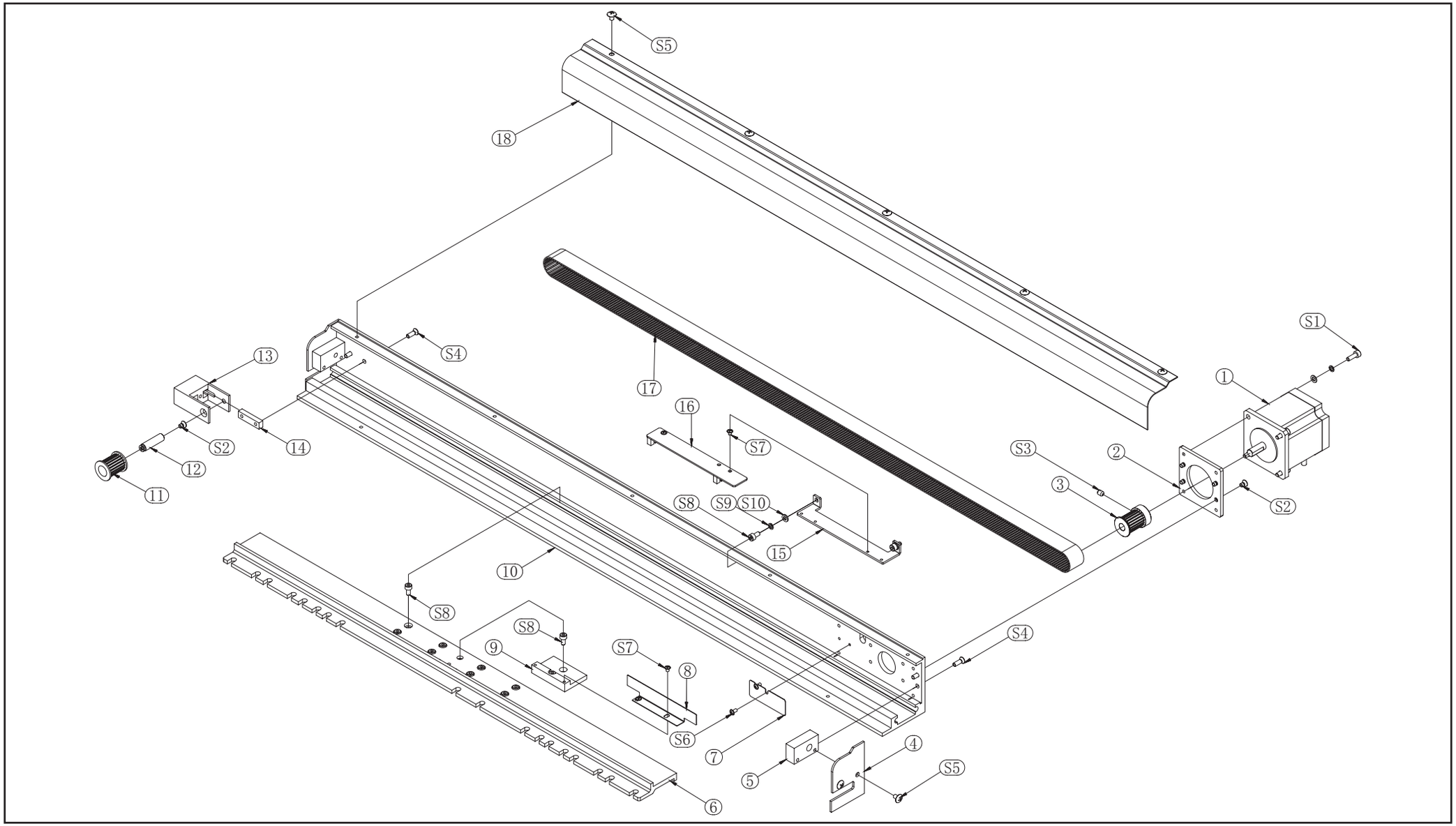

06 X-Axis Drive System

Item	Stock Number	Part Number
1	80306001	Motor DT-X 60byg350
2	3004100101	X Motor Mounting Plate -PM
3	3004100102	Drive Pulley-S3M-20-22
4	03100117	Driving Cover X
5	3004100103	Drive Cover Mounting Block
6	3004100104	Driving Plate
7	3003100113AA	Thread-Pressing Plate-SWD-X
8	3004105117	Limit Photosensitive Plate-X
9	3004100106	Belt Pressing Plate
10	3004100107	Drive Beam
11	3004100108	Driven Pulley-S3M-20-22
12	3004100109	Driven Pulley Axle
13	3004100110	Driven Pulley Bracket
14	3004100111	Pulley Bracket Fixing Block
15	3004100112	Limit Plate Mounting Bracket
16	3004100113	X-Limit Sensor

06 X-Axis Drive System

Item	Stock Number	Part Number
17	3004100114	S3M Timing Belt
18	3004100115	Drive Cover X-850
S1	80813471	M4 × 12 Cylindrical Head Hexagon Socket Screw+Spring Washer+Flat Washer
S2	80860408	M4 × 8 Flat Head Philips Screw- Stainless
S3	80880506	M5 × 6 Hexagon Socket Set Screw -Black
S4	80860412	M4 × 12 Flat Head Philips Screw- Stainless
S5	80746406	M4 × 6 Round Head Phillips Screws
S6	80742306	M3 × 6 Flanged Pan Head Phillips Screw
S7	80742306	M3 × 6 Flanged Pan Head Phillips Screw
S8	80813408	M4 × 8 Cylindrical Head Hexagon Socket Screw-Stainless
S9	80900418	M4 Spring Washer-Stainless
S10	80900403	M4 Flat Washer-Stainless

07 Thread Tension Base-Only Wheel

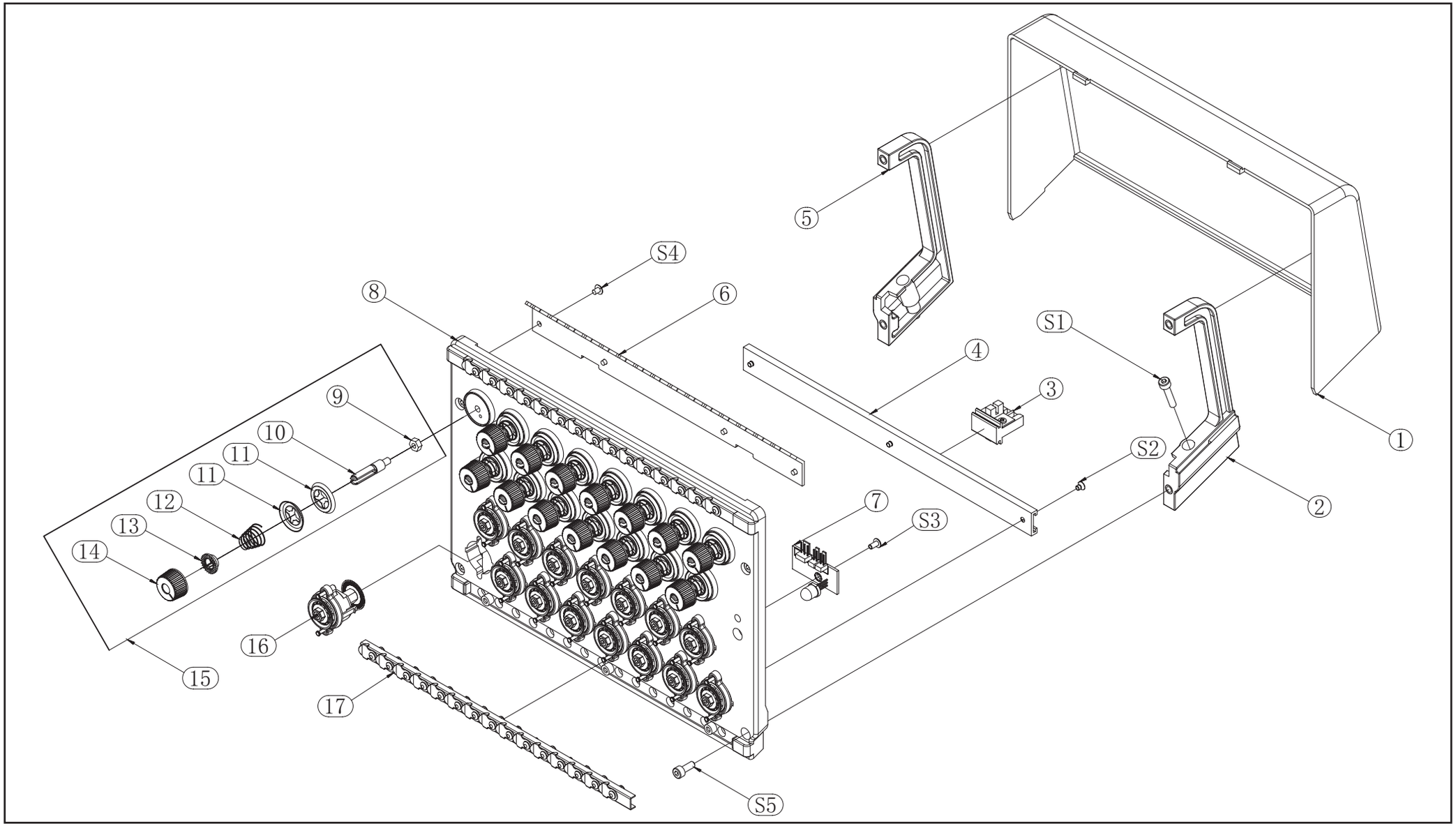

07 Thread Tension Base-Only Wheel

Item	Stock Number	Part Number
1	03144312	Thread Tension Base Rear Cover-15 Needles
1	03144212	Thread Tension Base Rear Cover-12 Needles
2	03144215	Right Bracket -Thread Tension Base
3	03150801	Thread Break Detecting Sensor
4	03131521	Break Thread Base Slipping Strip-15 Needles
4	03131221	Break Thread Base Slipping Strip-12 Needles
5	03144214	Left Bracket-Thread Tension Base
6	03144310	Thread Guide Support Plate-15 Needles
6	03144210	Thread Guide Support Plate-12 Needles
7	03150802	Alarm Sensor Board
8	03144305	Thread Tension Base Faceplate-15n Needles
8	03144205	Thread Tension Base Faceplate-12n Needles
9	80900428	M4 Nut-Stainless
10	03144208	Knob Pole-Wheel
11	03144203	Clamp Plate
12	03144224	Tension Spring-Only Wheel-Thread Diameter 0.6

07 Thread Tension Base-Only Wheel

Item	Stock Number	Part Number
13	03144226	Lock Washer-Wheel
14	03144207	Tension Knob-Wheel-425C
15	03144254	Adjusting Knob Module– Thread Tensioner
16	03144252	Thread Course Wheel Module-Bearing
17	03144353	Thread Course Strip Module-15
17	03144253	Thread Course Strip Module-12
S1	80813420	M4 × 20 Cylindrical Head Hexagon Socket Screw-Stainless
S2	80860304	M3 × 4 Flat Head Philips Screw- Stainless
S3	80742306	M3 × 6 Flanged Pan Head Phillips Screw
S4	80746304	M3 × 4 Small Round Head Phillips Screws-Nickel Plated
S5	80813412	M4 × 12 Cylindrical Head Hexagon Socket Screw-Stainless

07 Thread Tension Base Wheel+Spring

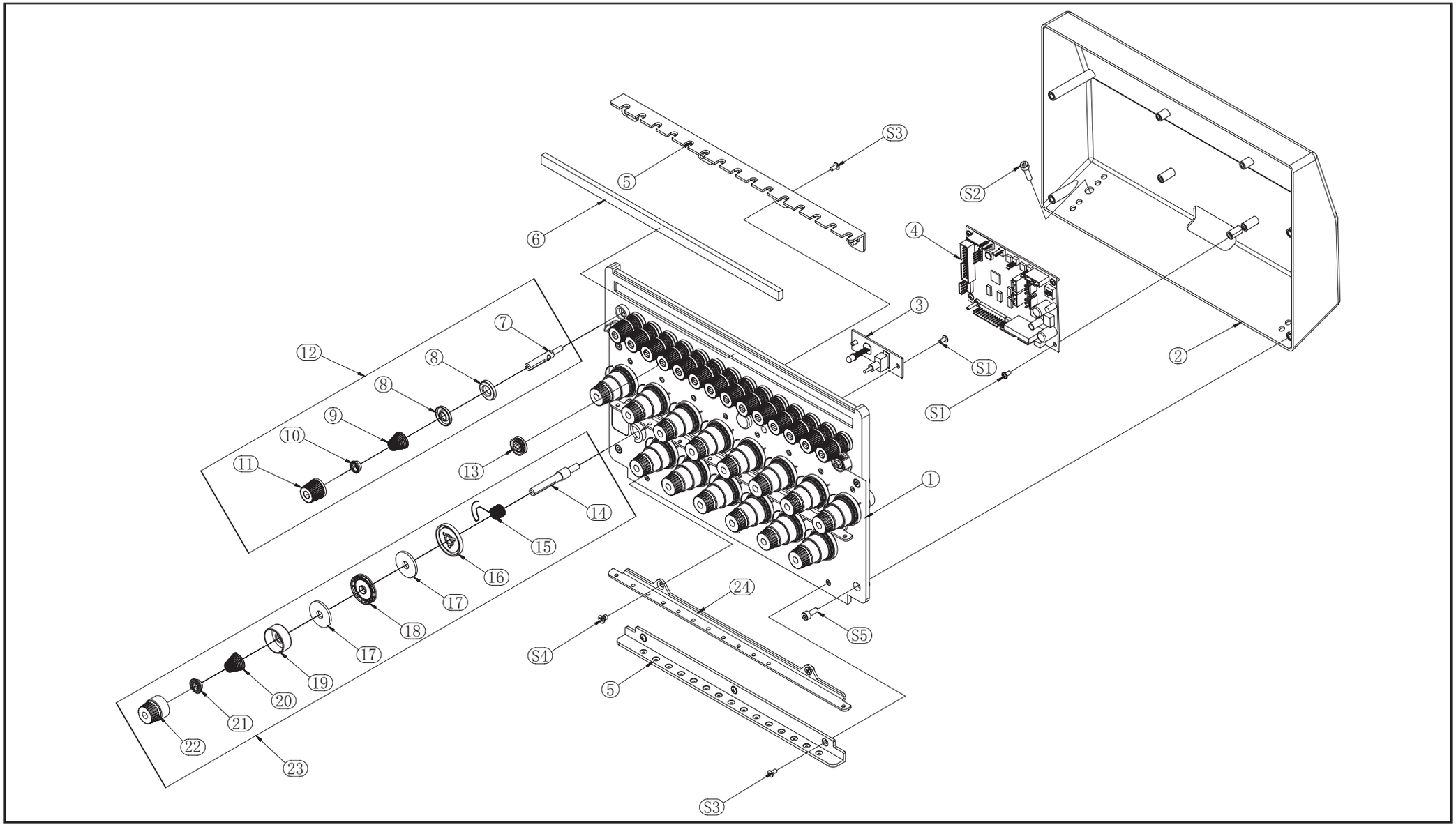

07 Thread Tension Base Wheel+Spring

Item	Stock Number	Part Number
1	72211915	Thread Tension Base Faceplate-15N
1	72211912	Thread Tension Base Faceplate-15N
2	2210615	Thread Tension Base Rear Cover-15-Wheel+Spring
2	72210612	Thread Tension Base Rear Cover-12-Wheel+Spring
3	03150802VA	Head Indicator Light Board with Wire-Led-P
4	7501061103	Head Board-Wheel+Spring-Motor and Thread Clamp
5	72211715	Thread Rack-15
5	72211712	Thread Rack-12
6	72211815	Felt Pad -15
6	72211812	Felt Pad -12
7	72210760-A	Small Knob Bolt
8	72210760-C	Knob Thread Clamp
9	72210703	Small Spring
10	72210760-B	Knob Teeth
11	72210705	Tightening Knob - Small Knob-DY
12	72210760	Small Knob Assembly-DY

07 Thread Tension Base Wheel+Spring

Item	Stock Number	Part Number
13	72210401	Winding Wheel-DY
14	72210360-C	Large Tension Bolt
15	72210301	Take-up Thread Spring
16	72210360-E	Knob Spring Washer
17	72210360-D	Felt Pad -D
18	72210305	Winding Wheel
19	72210360-B	Plastic Piece
20	72210307	Take-Up Tension Spring
21	72210360-A	Felt Pad -15
22	72210309	Tightening Knob
23	72210360	Large Knob Assembly-DY
24	72210915	Thread Rack-Upper-15
24	72210912	Thread Rack-Upper-12
S1	80742306	M3 × 6 Flanged Pan Head Phillips Screw
S2	80813416	M4 × 16 Cylindrical Head Hexagon Socket Screw-Stainless
S3	80746306	M3 × 6 Round Head Phillips Screws
S4	80860406	M4 × 6 Flat Head Philips Screw- Stainless
S5	80813412	M4 × 12 Cylindrical Head Hexagon Socket Screw-Stainless

08 Needle Bar Case

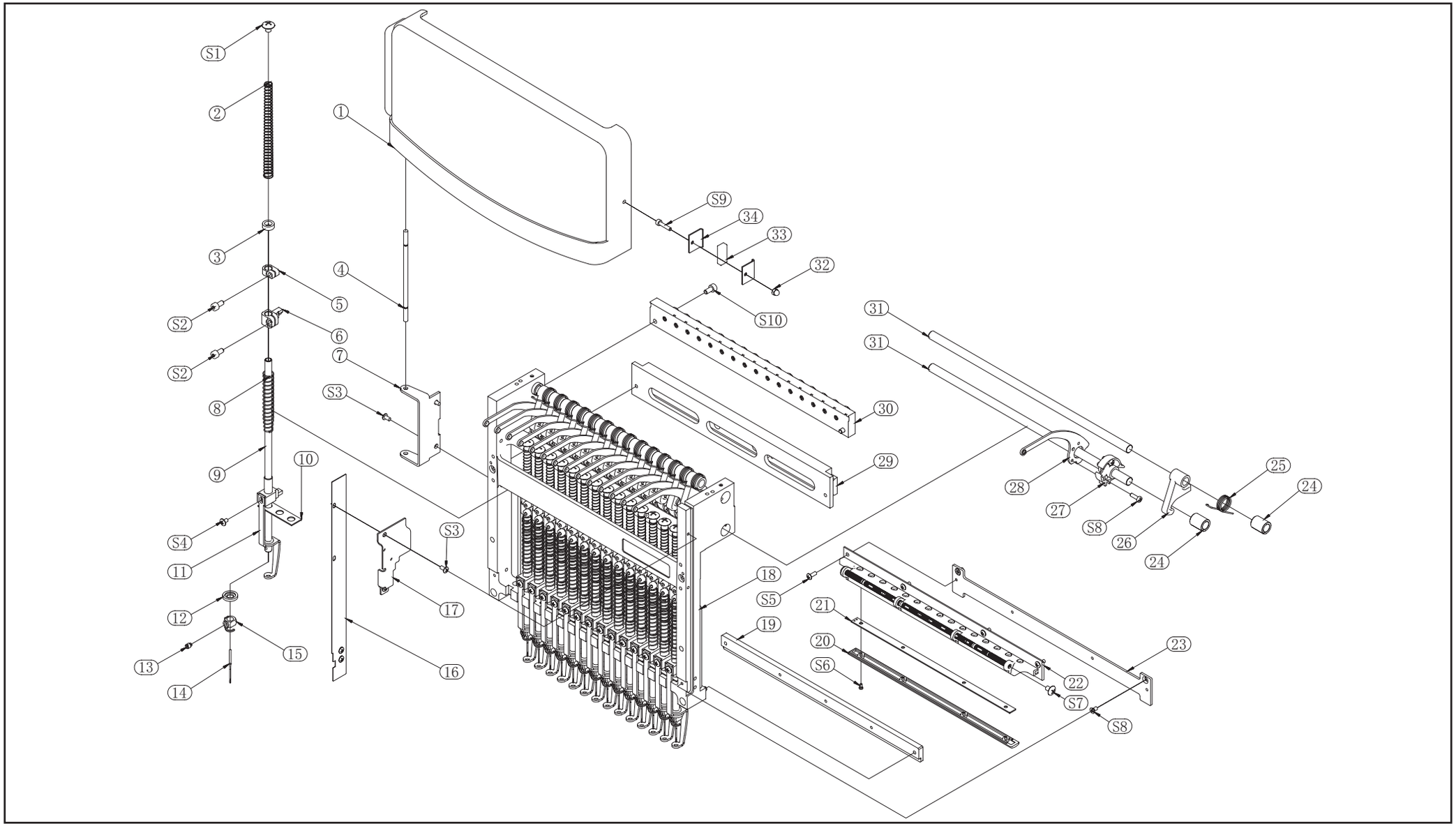

08 Needle Bar Case

Item	Stock Number	Part Number
1	03082351	Plastic Front Cover-15
1	03082302	Plastic Front Cover-12
2	03080102	Needle Bar Spring-P
3	4006200000	Presser Foot Rubber Ring -4
4	03082304	Cover Connecting Shaft-4
5	01222105	Upper Dead Point Clamp
6	01222106	Needle Bar Connecting Pin
7	03082301	Cover Support
8	03080108	Presser Foot Spring-P
9	03080160	Needle Bar-217
10	01221606	Hole Felt Pad
11	03080165	Adjustable Presser Foot Assembly-Stainless
12	01222110	Rubber Cushion
13	01222183AA	Needle Clamp Screw
14	80621111	Needle-DBXK5-11
15	01222194	Needle Clamp

08 Needle Bar Case

Item	Stock Number	Part Number
16	03090711	Single Head Machine Side Plate-Led
17	03082303	Magnet Base
18	03081115VA	Needle Bar Case-P-15-Led
18	03081103VB	Needle Bar Case-P-12
19	03081122	Lower Guide Rail-15-DT
19	03081121	Lower Guide Rail-12-DT
20	03090215	Lighting Cover-Lower Thread Guide-Led-15
20	03090212	Lighting Cover-Lower Thread Guide-Led-12
21	03090515	Alarm Sensor Board-Led-15-P
21	03090512	Alarm Sensor Board-Led-12-P
22	03090115	Lower Thread Course -Led-15
22	03090112	Lower Thread Course -Led-12
23	03090415	Mounting Base-Lower Thread Course-Led-15
23	03090412	Mounting Base-Lower Thread Course-Led-12
24	03081505	Take-up Shaft Block-15
25	03081503VA	Fixed Block Torsional Spring

08 Needle Bar Case

Item	Stock Number	Part Number
26	03081502	Take Up Lever Position Block
27	03081501	Take Up Lever Plastic Block
28	03081510-BA	Take-Up Lever-RCM-White Porcelain Sleeve
29	03040196CA	Needle Case Guide Rail -15-P
29	03040197CA	Needle Case Guide Rail -12-P
30	03081215VA	Color Change Plate-15
30	03081212VA	Color Change Plate-12
31	01221533	Take-Up Shaft - 15
31	01221532	Take-Up Shaft - 12
32	80900331	M3 Cap Nut-Stainless
33	03082306	Cover-Magnet-P
34	03082305	Magnet Clamping Plate
S1	80746506	M5 × 6 Round Head Phillips Screws
S2	80810408	M4 × 8 Cylindrical Head Hexagon Socket Screw-Black
S3	80746306	M3 × 6 Round Head Phillips Screws
S4	80746305	M3 × 5 Round Head Phillips Screws

08 Needle Bar Case

Item	Stock Number	Part Number
S5	80746308	M3 × 8 Round Head Phillips Screws
S6	80740204	M2 × 4 Small Round Head Phillips Screws
S7	80746406	M4 × 6 Round Head Phillips Screws
S8	80860326	M3 × 6 Flat Head Philips Screw- Stainless
S9	80813314	Hex Socket Cap Screw – M3 × 14 – Stainless
S10	80810412	M4 × 12 Cylindrical Head Hexagon Socket Screw-Black

09 Panel Support

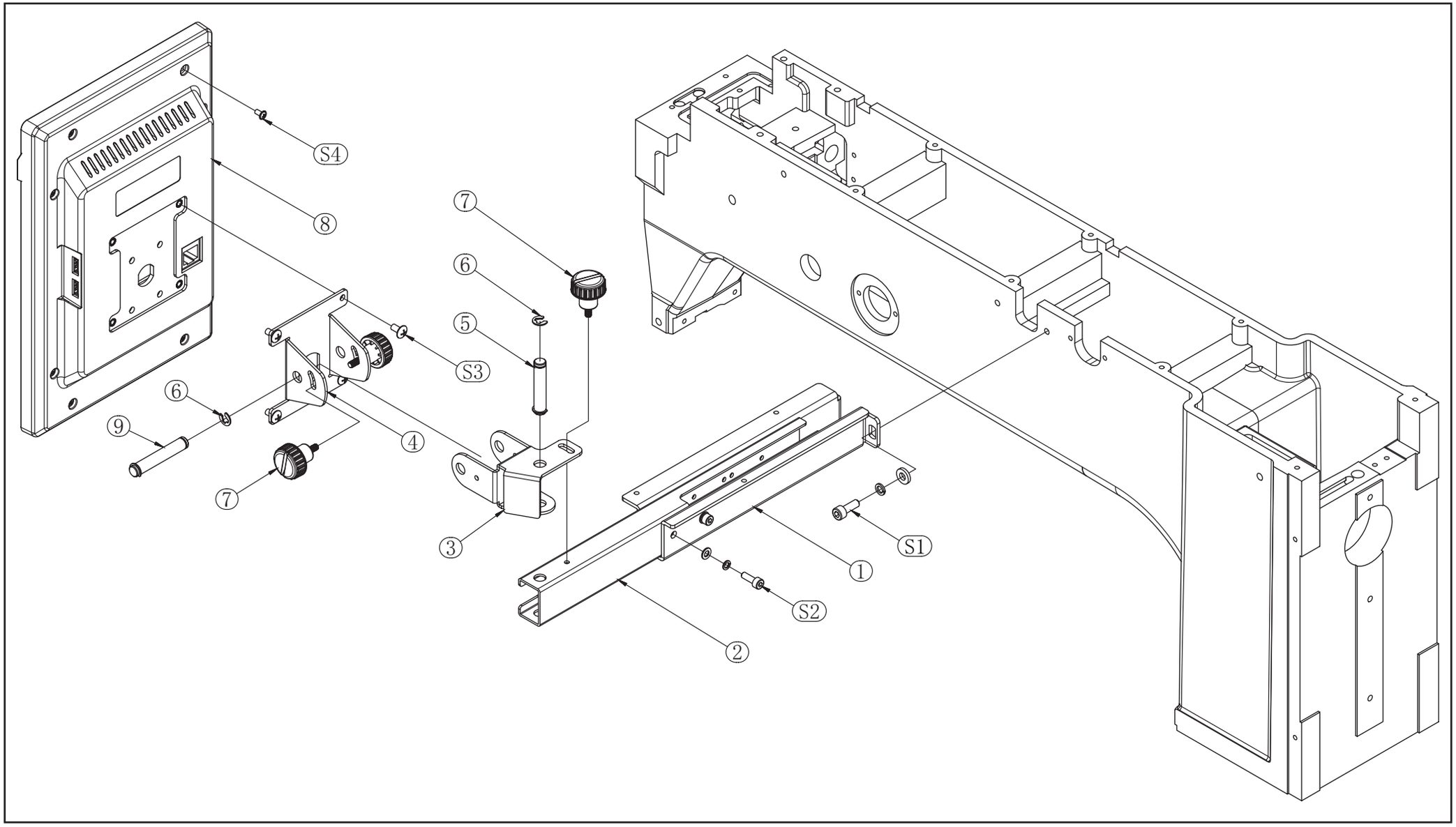

09 Panel Support

Item	Stock Number	Part Number
1	03044221	Bracket A-Control Panel
2	03044222	Bracket B-Control Panel
3	3006092103	Bracket C-Control Panel-EM
4	3006092104AA	Bracket D-Control Panel 10s-EM
5	3006092111	Pin A--Control Panel Bracket---EM
6	80030571	E Type Outer Circlip-5
7	3006092121	Rubber-Head Screw-Series E
8	7501011061	Control Panel-10s
9	3006092112	Pin B--Control Panel Bracket--Em
S1	80813581	M5 × 14 Cylindrical Head Hexagon Socket Screw+Spring Washer+Flat Washer
S2	80746408	M4 × 8 Round Head Phillips Screws
S3	80742306	M3 × 6 Flanged Pan Head Phillips Screw

10 Thread Stand

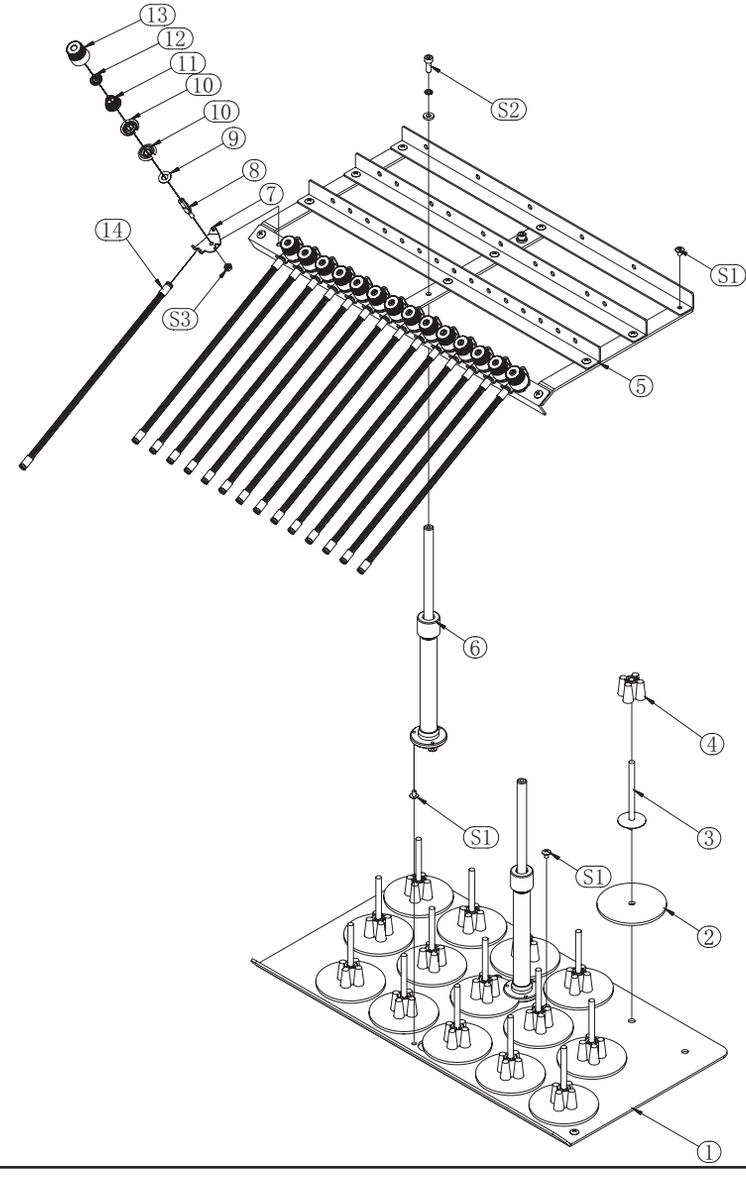

10 Thread Stand

Item	Stock Number	Part Number
1	03044114	Thread Plate 12 / 15
2	80211009	Foam Cushion
3	80211007	Thread Spool Pole
4	80211008	Plastic Cushion
5	03044191XY	Thread Stand Module -15
5	03044190XY	Thread Stand Module -12
6	03044152VA	Lifting Stand - Aluminum Alloy
7	03141001	Thread Guide Plate-Wheel
8	03144208	Knob Pole-Wheel
9	03141002	Felt-Thread Stand Knob
10	03144202	Thread Pressing Plate-Wheel
11	03144209	0.5 Tension Spring-Wheel
12	03144226	Lock Washer-Wheel
13	03144207	Tension Knob-Whee-425C
14	03044361	Plastic Thread Tube-Spiral-Transparent
S1	80746406	M4 × 6 Round Head Phillips Screws
S2	80813581	M5 × 14 Cylindrical Head Hexagon Socket Screw+Spring Washer+Flat Washer
S3	80900428	M4 Nut-Stainless

11 Frame

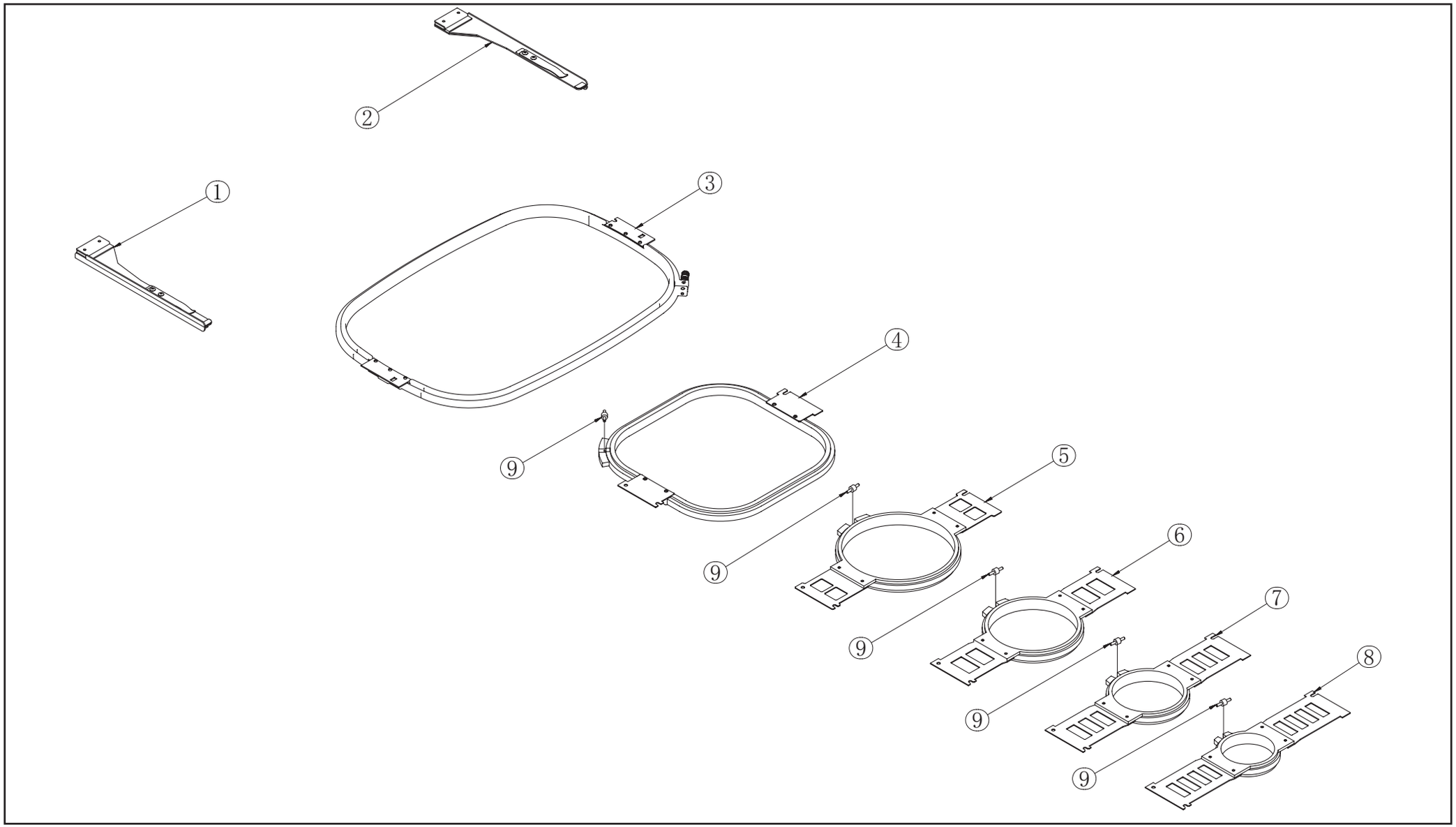

11 Frame

Item	Stock Number	Part Number
1	03100292	Frame Support Module-L
2	03100291	Frame Support Module-R
3	03173691VA	Hoop-540×360
4	02540681CB	Hoop CB-290
5	02540581CB	Hoop CB -190
6	02540481CB	Hoop CB -150
7	02540381CB	Hoop CB -120
8	02540281CB	Hoop CB -90
9	02540105	Pin Screw

12 10s Control Panel

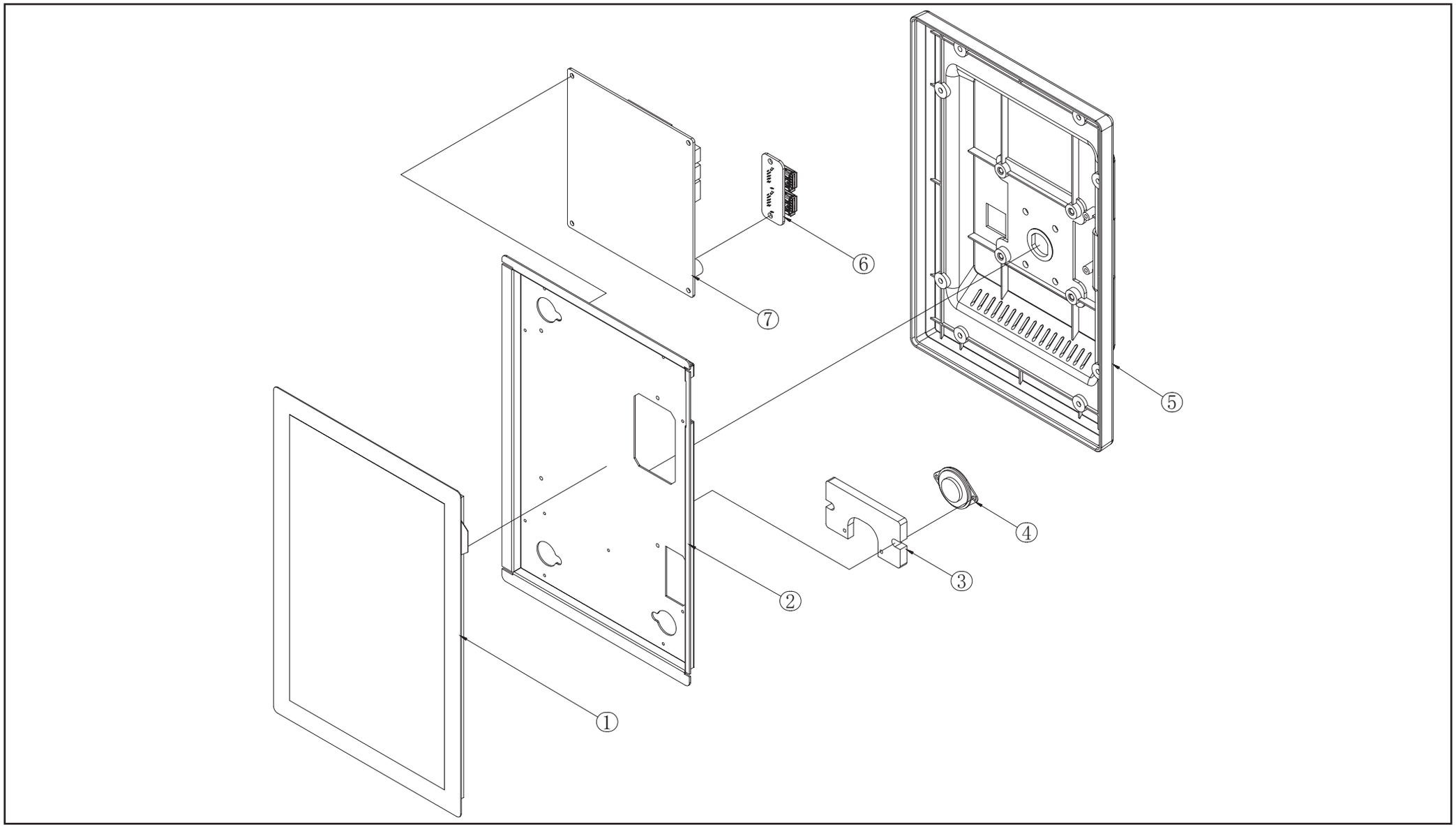

12 10s Control Panel

Item	Stock Number	Part Number
1	7501011004	Screen - Capacitive - 10.1
2	7501011022	Support Plate - Touch Screen - 10.1
3	7501011023	Mounting Base - Wireless - 10s
4	7501011005	Control Panel Speaker
5	7501011021	Back Cover – Control Panel - 10.1
6	7501011003	USB Interface Board
7	7501011002	Main Board - 10.1

12 Electrical Part-10s-Wheel+Spring

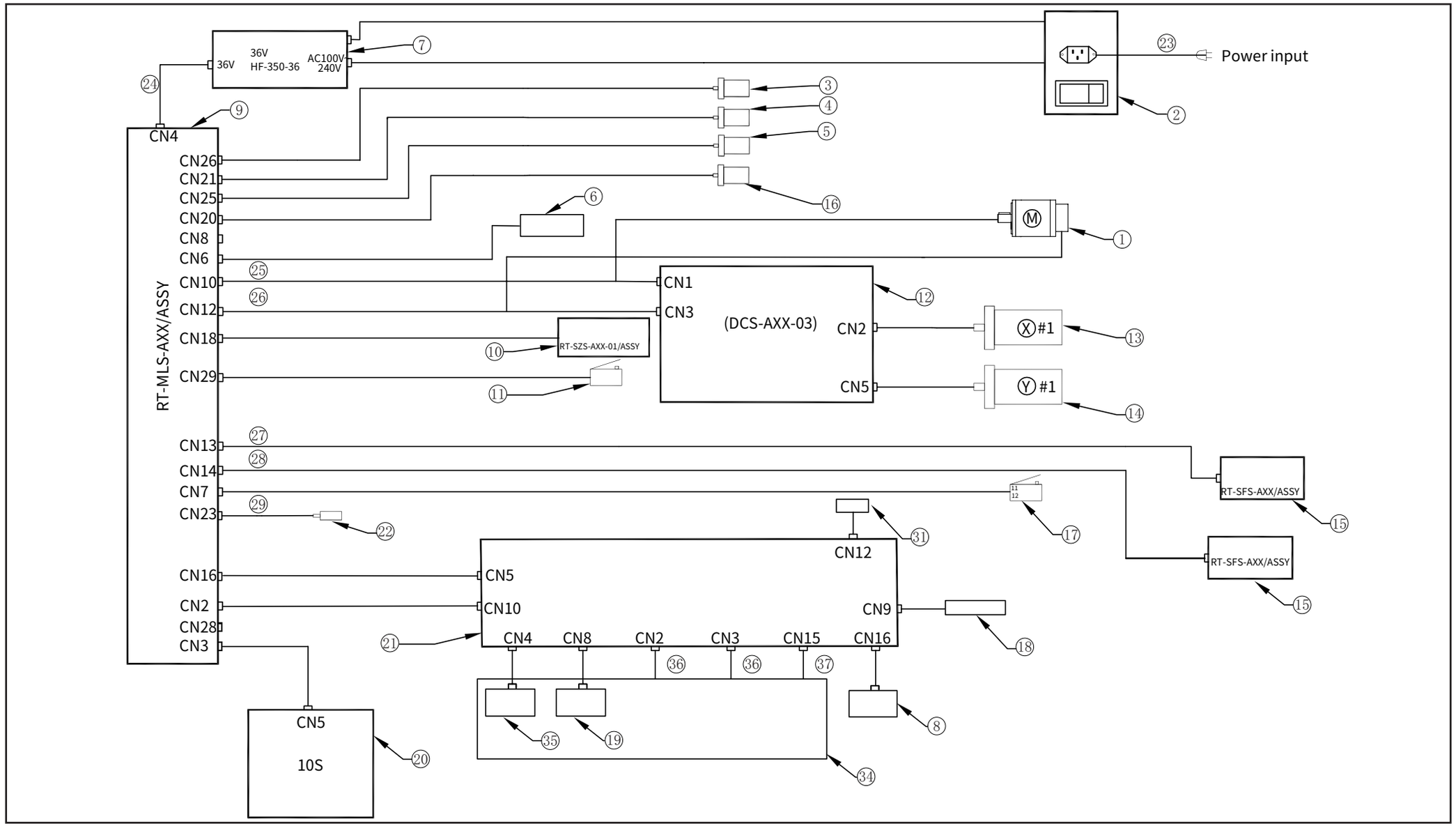

12 Electrical Part-10s-Wheel+Spring

Item	Stock Number	Part Number
1	80310701CB	Servo Motor-70SF3A60
2	3006153101	Input Socket
3	80304262	Stepper Motor-Two Phase-Dual Shaft, 42H62-D5
4	03021291	Motor - Trimming - L600
5	80304263VA	Stepper Motor-Two Phase-Dual Shaft, 42H62-D5
6	05313181	Laser Device
7	80380641	Switching Power Supply-HF350W-DC-24
8	03090512	Alarm Sensor Board-Led-12-P
8	03090515	Alarm Sensor Board-Led-15-P
9	7501020102	Main Board
10	7501040113AA	Sensor Board-Zero Position
11	80333602	Cylinder Proximity Switch NPN
12	7501030161	3 In 1 Driver
13	80306001	Motor DT-X 60BYG350
14	80308630	Motor 86BYG350
15	7501040111	Sensor Board-Limit Position-XY

12 Electrical Part-10s-Wheel+Spring

Item	Stock Number	Part Number
16	80304213	Jumping Motor 42BYGH5201-01
17	03150231	Emergency Button
18	7501210222	Terminal Resistor - Headboard - 2510
19	7501061121	Thread Break Sensor Board-19-12N
19	7501061122	Thread Break Sensor Board-19-15N
20	7501011061	Control Panel-10s
21	7501061103	Head Board-Wheel+Spring-Motor and Thread Clamp
22	7501210150	Potentiometer Assembly - Color Change
23	80390105	Power Cable RVVZ-3P-2
24	7501210101	Switching Power Supply - Main Board - Power Cable
25	7501210102	Main Board - 3in1 Driver - Power Cable
26	7501210304	Driver - Main Board - Signal Cable
27	7501210107	Main Board - X Limit Board - Signal Cable B
28	7501210108	Main Board - Y Limit Board - Signal Cable
29	7501210109	Main Board - Potentiometer - Signal Cable
30	03154341MT	Laser Pointer – Main Board Power Cable

12 Electrical Part-10s-Wheel+Spring

Item	Stock Number	Part Number
31	80320230	Picker Solenoid-DC30V
32	7501210204	Thread Break Detection Board- Headboard - Signal Cable
33	7501210203	Switch Board - Headboard - Signal Cable
34	72216012BA	Wheel+Spring Thread Tension Base-12-10s
34	72216015BA	Wheel+Spring Thread Tension Base-15-10s
35	7501061112	Switch Board- Wheel+Spring
36	7501210205	Bottom Detection - Head Board - 7-Core Power Cable
36	7501210208	Bottom Detection - Head Board - 1-Core Power Cable
37	7501210207	Bottom Detection - Head Board - 5-Core Power Cable
37	7501210205	Bottom Detection - Head Board - 7-Core Power Cable

12 Electrical Part-10s-Only Wheel

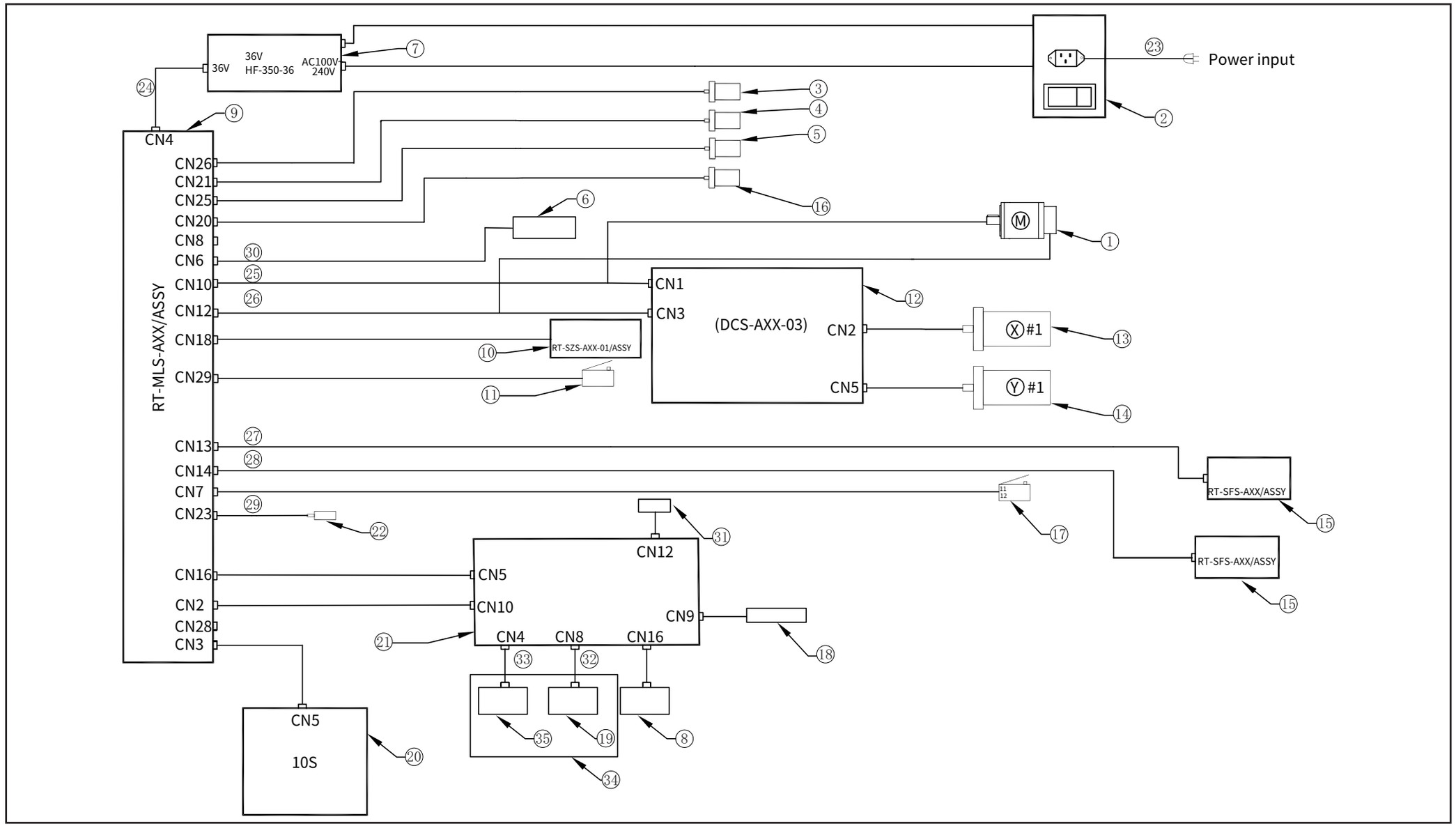

12 Electrical Part-10s-Only Wheel

Item	Stock Number	Part Number
1	80310701CB	Servo Motor -70SF3A60
2	3006153101	Input Socket
3	80304262	Stepper Motor-Two Phase-Dual Shaft, 42H62-D5
4	03021291	Motor-Trimming-L600
5	80304263VA	Stepper Motor-Two Phase-Dual Shaft, 42H62-D5
6	05313181	Laser Device
7	80380641	Switch Power Supply
8	03090512	Alarm Sensor Board-Led-12-P
8	03090515	Alarm Sensor Board-Led-15-P
9	7501020102	Main Board
10	7501040113AA	Sensor Board-Zero Position
11	80333602	Cylinder Proximity Switch NPN
12	7501030161	3 In 1 Driver
13	80306001	Motor DT-X 60BYG350
14	80308630	Motor 86BYG350
15	7501040111	Sensor Board-Limit Position-XY

12 Electrical Part-10s-Only Wheel

Item	Stock Number	Part Number
16	80304213	Jumping Motor 42BYGH5201-01
17	03150231	Emergency Button
18	7501210222	Terminal Resistor - Headboard - 2510
19	7501040114	Sensor Board-Detecting Thread Break
20	7501011061	Control Panel-10s
21	7501061102	Head Board-Wheel+Spring-Motor
22	7501210150	Potentiometer Assembly - Color Change
23	80390105	Power Cable RVVZ-3P-2
24	7501210101	Switching Power Supply - Main Board - Power Cable
25	7501210102	Main Board - 3in1 Driver - Power Cable
26	7501210304	Driver - Main Board - Signal Cable
27	7501210107	Main Board - X Limit Board - Signal Cable B
28	7501210108	Main Board - Y Limit Board - Signal Cable
29	7501210109	Main Board - Potentiometer - Signal Cable
30	03154341MT	Laser Pointer - Multifunction Board Power Cable
31	80320230	Picker Solenoid-DC30V

12 Electrical Part-10s-Only Wheel

Item	Stock Number	Part Number
32	7501210104	Main Board - Sensor Board-Detecting Thread Break-Signal Cable
33	7501210105	Main Board - Alarm Light - Signal Cable
34	03144391DA	Thread Tension Base-15n-Only Wheel-10s
34	72216012BA	Thread Tension Base-12n-Wheel+Spring-10s
35	7501061111	Alarm Light - Only Wheel