ricoma

THINK BEYOND

MARQUEE2

Parts Book



Ver.20260827

Catalogue

01 Machine Frame 01

02 Main Shaft 03

03 Rotary Hook 06

04 Machine Head 1 09

04 Machine Head 2 12

05 Needle Bar Case 15

06 Color Change 18

07 Thread Trimming 20

08 Y Drive 22

09 X Drive 25

10 Thread Stand 28

11 Thread Tension Base 30

*The Company reserves the right of final interpretation. Unauthorized reproduction or commercial use is prohibited. Violators will be held legally liable.

12 Lower Frame 33

13 Control Panel 35

14 Electronic Control 37

15 Cap Driver 40

16 Frame 1 42

16 Frame 2 44

17 Table 46

*The Company reserves the right of final interpretation. Unauthorized reproduction or commercial use is prohibited. Violators will be held legally liable.

01 Machine Frame

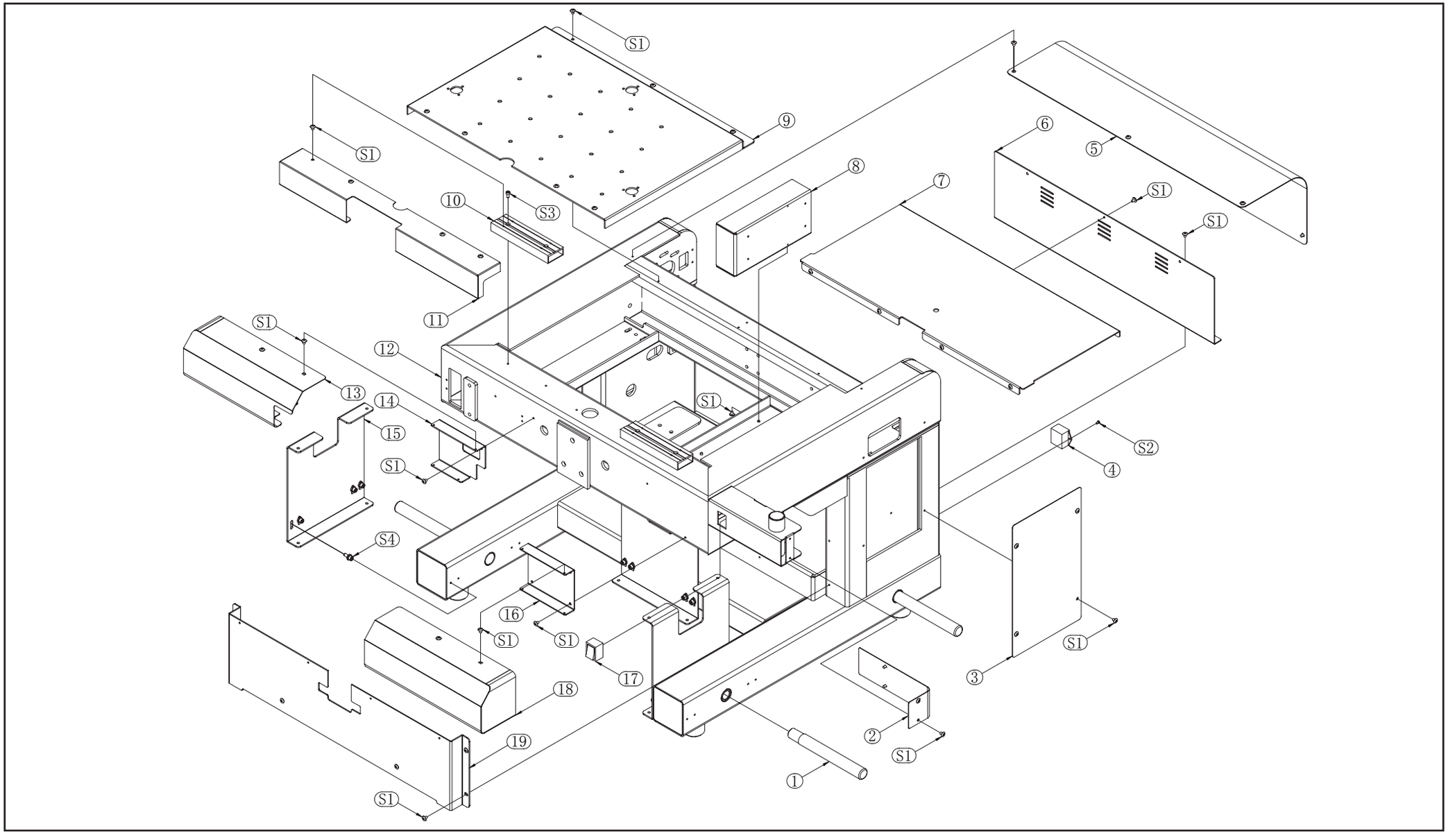

01 Machine Frame

Item	Stock Number	Stock Number
1	3012102101	Handlebar - M20
2	3012310124-PY	Rear cover – control panel bracket
3	3012100311-PY	Frame side cover - STM
4	03150602	Power connection socket
5	3012101301-PY	Rear upper cover - STM - 1T
6	3012101401-PY	Rear vertical cover - MT - 1T
7	3012101201-PY	Upper cover - shuttle box - STM
8	80380641	Switching power supply
9	3012101110-PY	15N thread plate - STM - 1T
9	3012101106-PY	20N thread plate - STM - 1T
10	3012101131	Spacer block - thread plate - STM
11	3012101132-PY	Thread plate front cover - STM - 1T
12	3012100101-PY	Upper rack - STM - 1T
13	3012100305-PY	Upper cover - L - STM
14	3012100302-PY	Mounting base - upper shaft cover – STM
15	3011311011AA-PY	Table bracket B – MT

Item	Stock Number	Part Number
16	3012100301-PY	Mounting base r - upper shaft cover - STM
17	03150603	Power switch
18	3012100304-PY	Upper cover - R - STM
19	3012101501-PY	Shuttle box lower cover - STM – 1T
S1	80746406	Large round head phillips screw M4 × 6
S2	80860326	Flat countersunk cross recessed screw M3 × 6 – stainless steel
S3	80810408	Cylindrical head hexagon socket screw M4 × 8 – black
S4	80813581	Cylindrical head hexagon socket combination screw M5 × 14

02 Main Shaft

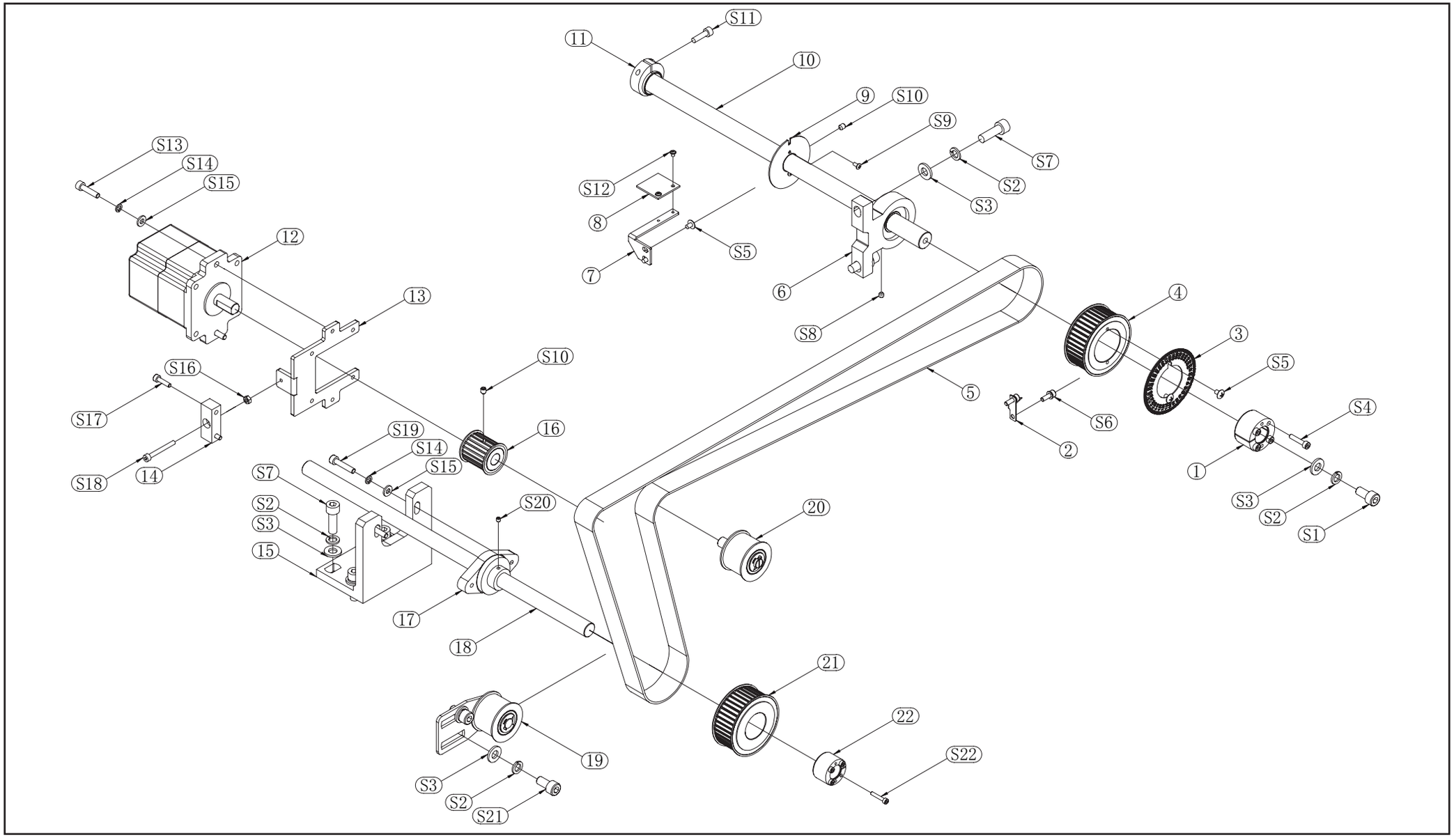

02 Main Shaft

Item	Stock Number	Stock Number
1	80031844	Clamping sleeve – ZA – 18 × 35
2	02311141	Dial pointer
3	3011200130AA	70 Dial – MT2
4	3011200192AA	Timing pulley – upper / lower shaft – MT – 18
5	80025154	Timing belt - 5M - 20 - rubber 1760
6	02311182	Bearing housing with bearing 42 - height 45
7	3012200101	Zero - position sensor bracket - STM
8	7501040113AA	Zero position sensor
9	03041207AA	Zero position baffle H18
10	3011206011	Upper shaft - reverse thread - 18 - 390
11	01212401	Cam clamping sleeve - 18 shaft - M22
12	80310724	Servo motor 70SF3A60 - 340 - 1000Z
13	3012200130	Mounting base - main motor - 70
14	3012200132	Tension adjustment base - main axis - motor mount
15	3011201101	Bearing housing - MT - lower shaft
16	3011200193AA	Timing pulley - main motor

Item	Stock Number	Stock Number
17	01400660	Trimming box bearing assembly
18	3011206001	Upper shaft - reverse thread - 15 - 390
19	3012200160	Tensioner pulley assembly - main axis - STM
20	3012200161	Driven pulley assembly - main axis - STM
21	3011200192VA	Timing pulley - upper / lower shaft
22	80031544	Clamping sleeve - ZA - 15 × 28
S1	80813816	Cylindrical head hexagon socket screw M8 × 16
S2	80900813	Spring washer M8 - black
S3	80900801	Flat washer M8 – stainless steel
S4	80810420	Cylindrical head hexagon socket screw M4 × 20 – black
S5	80746406	Large round head phillips screw M4 × 6
S6	80813471	Cylindrical head hexagon combination screw M4 x 12
S7	80810825	Cylindrical head hexagon socket screw M8 × 25 – black
S8	80880504	Hexagon socket set screw M5 × 4
S9	80746306	Large round head phillips screw M3 × 6
S10	80880506	Hexagon socket set screw M5 × 6

02 Main Shaft

Item	Stock Number	Stock Number
S11	80810518	Cylindrical head hexagon socket screw M5 × 18 – black
S12	80742304	Flanged pan head cross recessed screw M3 × 4
S13	80810522	Cylindrical head hexagon socket screw M5 × 22 – black
S14	80900518	Spring washer M5 – stainless steel
S15	80900501	Flat washer M5 – stainless steel
S16	80900428	Nut M4 - stainless steel
S17	80810416	Cylindrical head hexagon socket screw M4 × 16 – black
S18	80810435	Cylindrical head hexagon socket screw M4 × 35 – black
S19	80813525	Cylindrical head hexagon socket screw M5 × 5 – stainless steel
S20	80880404	Hexagon socket set screw M4 × 4
S21	80810816	Cylindrical head hexagon socket screw M8 × 16 – black
S22	80810318	Cylindrical head hexagon socket screw M3 × 18 – black

Item	Stock Number	Stock Number

03 Rotary Hook

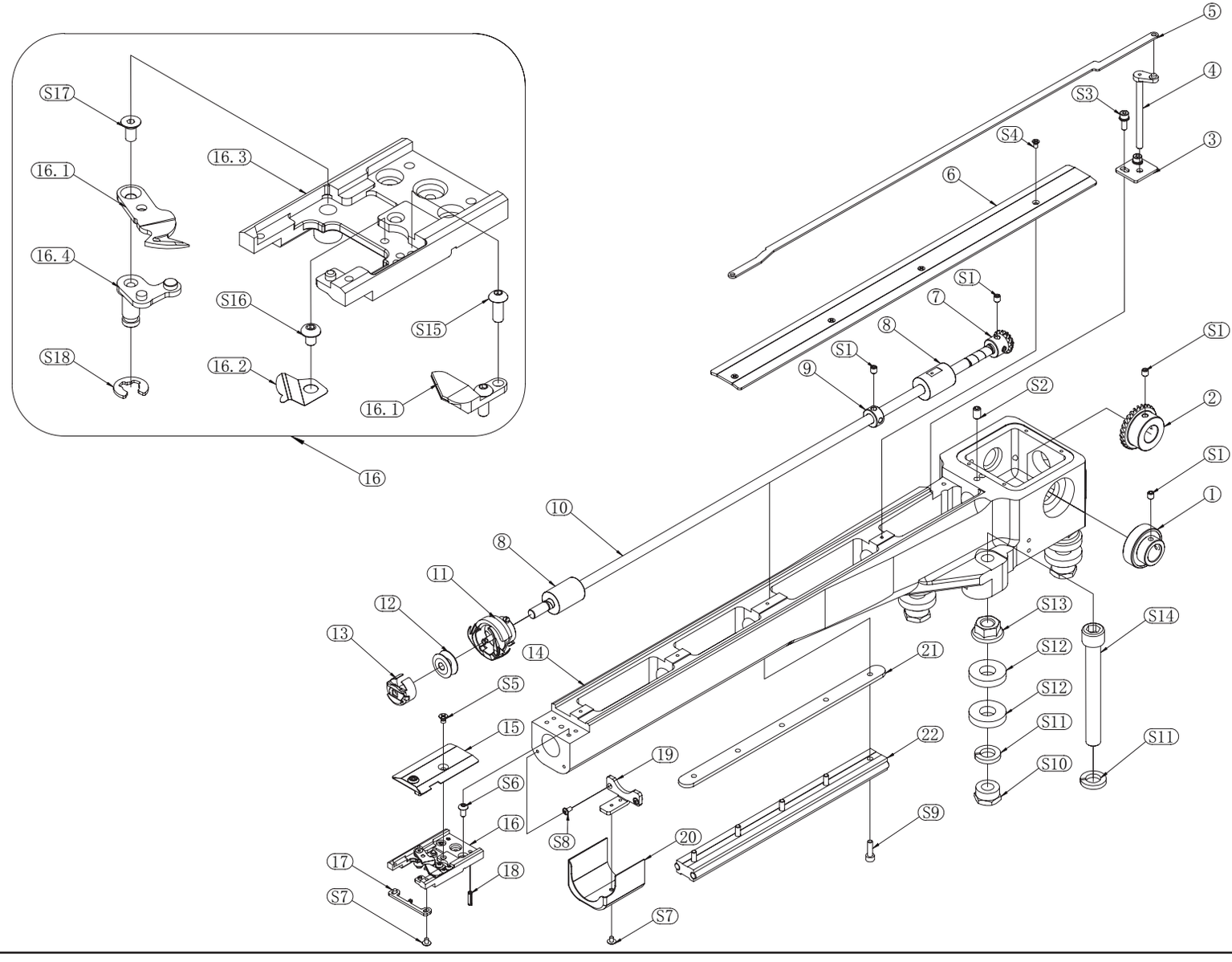

03 Rotary Hook

Item	Stock Number	Stock Number
1	80031522	Bearing
2	01030136	Large bevel gear
3	3011150146	Mounting plate - trimming drive lever
4	3011150140	Trimming rotating lever - shuttle box
5	3012150115	Trimming pull rod
6	3012150121	Shuttle box cover plate
7	01030137	Small bevel gear
8	3012150110	Bearing sleeve - shuttle box
9	02010633	Rotary hook shaft retaining ring
10	3011150132	Rotary hook shaft
11	80620283	Rotary hook
12	80620302	Bobbin
13	80620301	Bobbin case
14	3012150101-PY	Shuttle box - STM
15	3006021112BA	Needle plate
16	3012150260	Trimming base

Item	Stock Number	Stock Number
16.1	02101232AA	Fixed knife - TX
16.1	02101231AA	Movable knife - TX
16.2	02101233	Fixed knife shrapnel
16.3	3012150201	Needle plate base
16.4	3012150210	Drive lever - movable knife
17	3012150202	Positioning hook - rotary hook
18	80680201	Flexible cotter PIN
19	3012150113	Bracket - shuttle box cover
20	3012150114	Cover - needle plate base
21	3012150122	Cap frame spacer
22	02815039	Linear guide rail kit
S1	80880505	Hexagon socket set screw M5 × 5
S2	80880610	Hexagon socket set screw M6 × 10
S3	80813471	Cylindrical head hexagon combination screw M4 x 12
S4	80860326	Countersunk head phillips screw M3 × 6
S5	80860406	Countersunk head phillips screw M4 × 6

03 Rotary Hook

Item	Stock Number	Stock Number
S6	80750406	Round head socket head cap screw M4 × 8
S7	80746304	Large round head phillips screw M3 × 4
S8	80742306	Flange half-round phillips screw M3 × 6
S9	80810414	Round head socket head cap screw M4 × 14
S10	80901229	Nylon self-locking nut M12
S11	80901213	Spring washer M12
S12	80901206	Flat washer M12
S13	80901231	Flange nut M12
S14	808112100	Hexagon socket head cap screw M12 × 100
S15	80760308	Hexagon socket button head screw M3 × 8
S16	80750304	Hexagon socket small button head screw M3 × 4
S17	80865306	Countersunk hexagon socket screw M3 × 6
S18	80030571	E type outer circlip - 5

Item	Stock Number	Stock Number

04 Machine Head 1

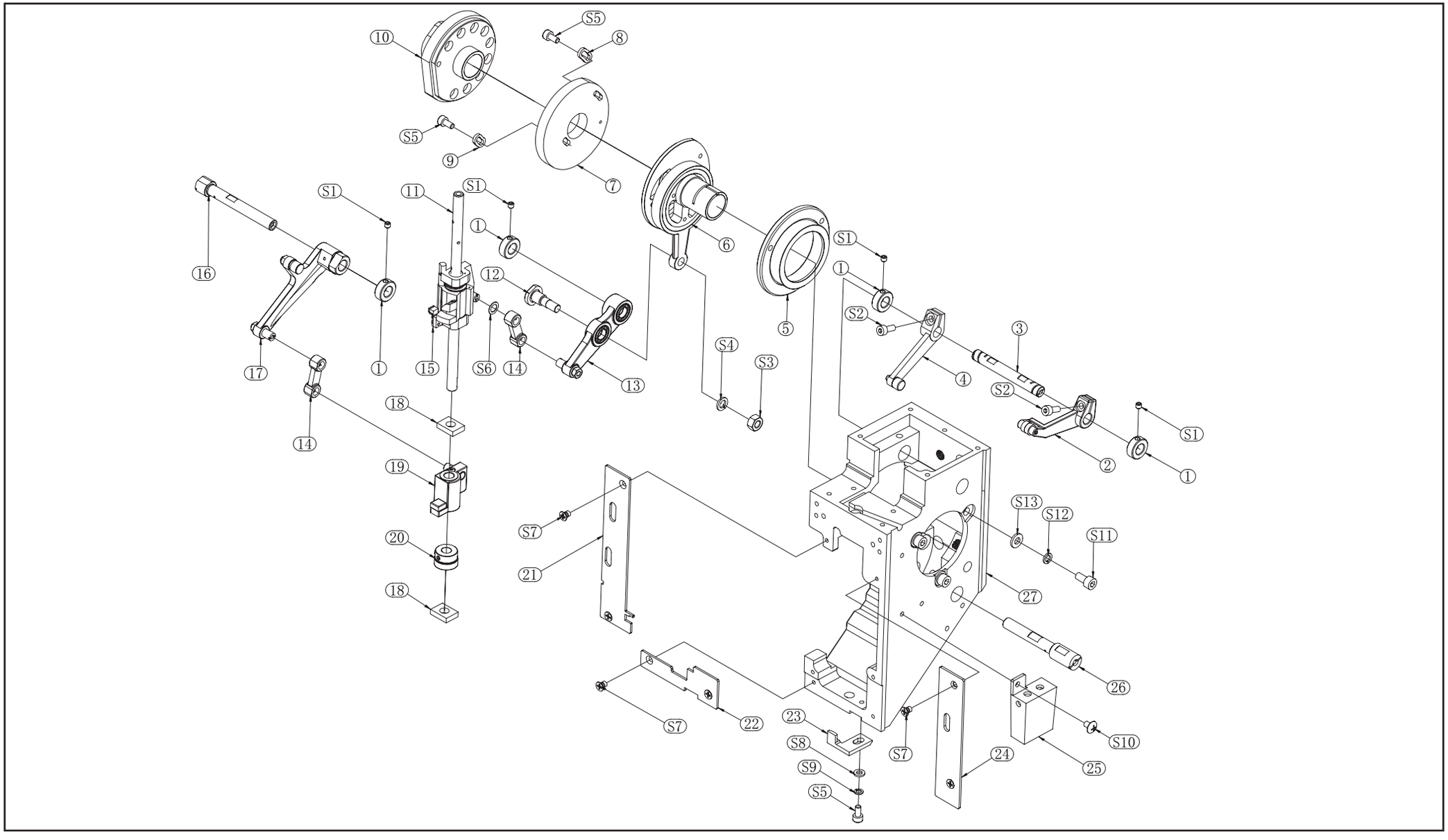

04 Machine Head 1

Item	Stock Number	Stock Number
1	01202204	Retaining ring
2	01212165DX	Thread take - up link assembly B
3	01212307DX	Thread take - up link PIN
4	01212163DX	Thread take - up link assembly A
5	4005030660	Housing bearing seat - 18 shaft
6	01212463	Large connecting rod - 18 shaft
7	4005050200	Thread take - up cam - 18 shaft
8	01201302	Cam washer A
9	01201303	Cam washer B
10	01212272	Presser foot cam + aluminum ring + aluminum seat - 18 shaft
11	01212306	Head drive shaft - high - speed head
12	01212305	Three - eye link PIN - double cam
13	01212161DX	Three - eye link assembly - high speed
14	01212109	Small link - high speed head
15	01212063	Needle bar reciprocator - H - motor
16	01212123	Presser foot drive PIN - double cam

Item	Stock Number	Stock Number
17	01212262	Presser foot link - double cam
18	01212310	Felt pad - high speed head
19	01212260DX	Presser foot driving block assembly
20	01202291	Drive shaft collar assembly
21	01212603	Head front left cover plate - motor thread clamp - 45
22	01212605	Head front lower cover plate - motor thread clamp - 45
23	01210122	Positioning hook - lower guide rail - high - speed
24	01211007DX	Head front right cover plate - high speed head
25	7201520001	Head self - priming lubrication tank
26	01212305	Three - eye link PIN - double cam
27	01210101BA	Double - cam dual - drive 45 head - motor thread clamp
S1	80880404	Hexagon socket set screw M4 × 4
S2	80810410	Hexagon socket head cap screw M4 × 10 – black
S3	80900628	Nut M6 - stainless steel
S4	80900618	Spring washer M6 - stainless steel
S5	80810408	Hexagon socket head cap screw M4 × 8 – black

04 Machine Head 1

Item	Stock Number	Stock Number
S6	80900619	Flat washer M6 - stainless steel
S7	80860406	Countersunk head phillips screw M4 × 6 - stainless steel
S8	80900401	Flat washer M4 - stainless steel
S9	80900418	Spring washer M4 - stainless steel
S10	80746406	Large round head phillips screw M4 × 6
S11	80810510	Hexagon socket head cap screw M5 × 10 - black
S12	80900518	Spring washer M5 - stainless steel
S13	80900501	Flat washer M5 - stainless steel

Item	Stock Number	Stock Number

04 Machine Head 2

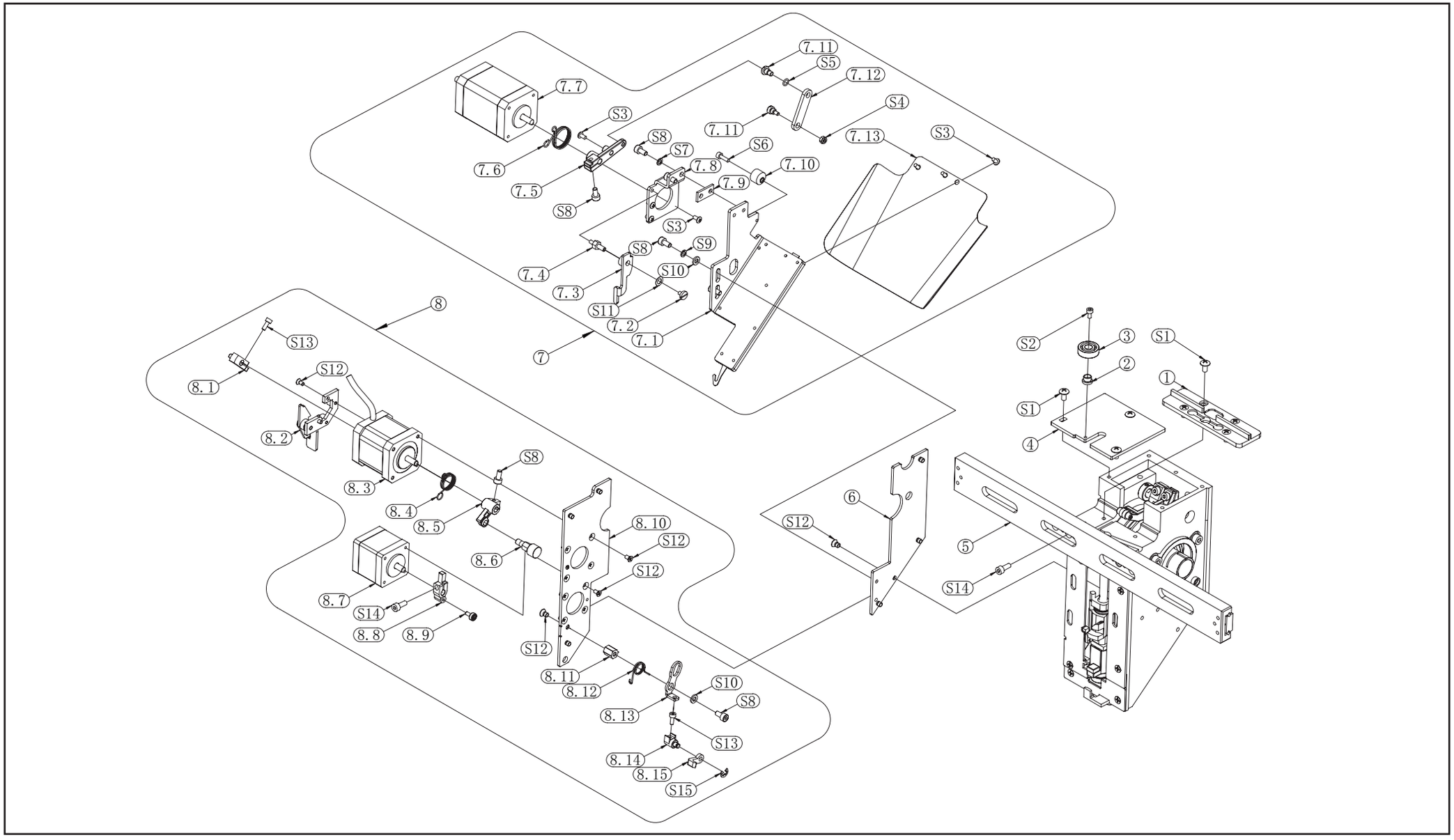

04 Machine Head 2

Item	Stock Number	Stock Number
1	01213308AA	Thread take - up guide plate
2	01293840	PIN - color change bearing
3	80030722	Deep groove bearing 19 - 7 - 6
4	4005230000	Head top cover plate - plate C
5	7241010122	Head guide rail - single head - 21 needle
6	01212601	High speed head plate a - motor thread clamp - 45
7	01431283	Thread hook kit - motor thread clamp – 45
7.1	01431250	Thread hook assembly - stepping thread hook - wide head
7.2	01431212	Slotted large - head screw M3 × 4.5
7.3	01431280G	Latch - stepping thread hook - wide head
7.4	01431211	Locating PIN - thread hook latch M3 × 8 + 6
7.5	03040603	Thread hook drive arm
7.6	03040604	Drive arm return spring
7.7	01431205	Thread hook motor - 42 stepper
7.8	01431280E	Motor mounting base - stepper thread hook - wide head
7.9	01431280D	Spacer block - stepping thread hook - wide head

Item	Stock Number	Stock Number
7.10	03040605	Silencing block - ø12 × 6 - M3
7.11	3006040621	Stepped screw 5 - 3 - M3
7.12	01431280F	Link - stepping thread hook - wide head
7.13	2050180000	Stainless steel cap baffle - CH2 - type B
8	3011XX01-18C	18 - Shaft head accessory - motor thread clamp - left
8.1	4005330210-02	Manual lock toggle lever
8.2	4005330210-01	Manual lock wrench + base plate
8.3	80304261	Stepper motor 42D48C1206EA - 1200
8.4	4005330205	Return torsion spring
8.5	4005330203	Jump drive arm
8.6	4005330204VA	Jump stud
8.7	80303501	35 two - phase stepper motor
8.8	01260019	Thread clamp swing arm - 47 independent motor presser foot
8.9	80030372	External threaded bearing
8.10	01212602	High speed head plate B - motor thread clamp
8.11	01212625	Link fixing stud - motor thread clamp - 45

04 Machine Head 2

Item	Stock Number	Stock Number
8.12	01260023	Thread clamp swing arm torsion spring - 47 independent motor presser foot
8.13	01212621	Link - motor thread clamp - 45
8.14	01260022	Thread clamp top block stud - 47 independent motor presser foot
8.15	01212631	Top block - motor thread clamp - 45
S1	80746408	Large round head phillips screw M4 × 8
S2	80810306	Hexagon socket head cap screw M3 × 6 – black
S3	80746306	Large round head phillips screw M3 × 6
S4	80900332	Lock nut m3
S5	80030553	O - ring - outer 7 × 1
S6	80810310	Hexagon socket head cap screw M3 × 10 – black
S7	80900413	Spring washer M4 - black
S8	80810408	Hexagon socket head cap screw M4 × 8 - black
S9	80900418	Spring washer M4 – stainless steel
S10	80900401	Flat washer M4 - stainless steel
S11	80900504	Graphite nylon washer M5 × 9 × 0.25
S12	80860326	Countersunk cross screw M3 × 6 – stainless steel

Item	Stock Number	Stock Number
S13	80810308	Hexagon socket head cap screw M3 × 8 – black
S14	80810410	Hexagon socket head cap screw M4 × 10 – black
S15	80550105	E - type retaining clip ø4

05 Needle Bar Case

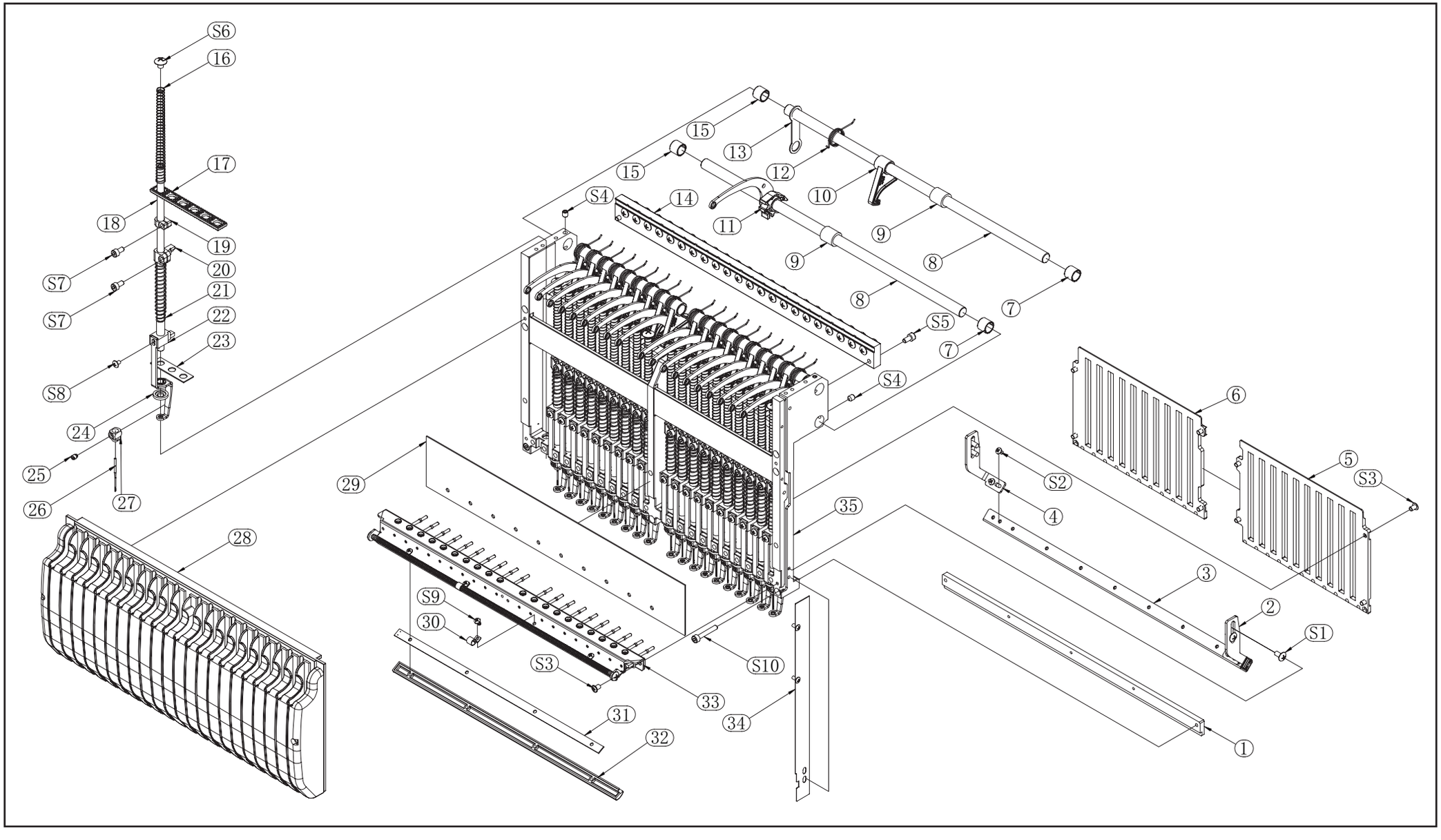

05 Needle Bar Case

Item	Stock Number	Stock Number
1	7241010123	Lower guide rail - RP - 21
1	01213116	Lower guide rail - high speed - 15 needle
2	72100121VA	Mounting bracket - thread clamp RD - R
3	72100190-20	Thread clamp assembly - RD - 20
3	72100190-15	Thread clamp assembly - RD - 15
4	72100122VA	Mounting bracket - thread clamp RD - L
5	03081234	Needle bar guide plate - R - 21N
6	03081233	Needle bar guide plate - L - 21N
6	72014109-15	Guide plate - needle bar case - 15 needle
7	03081508AA	Thread take - up shaft stop block - 15 - 20N
7	03081507	Thread take - up shaft stop block - 17
7	03081507AA	Thread take - up shaft stop block - 17
8	72100206-20	Thread take - up lever shaft - D10 × 340
8	01221533	Thread take - up lever shaft - 15 needle
9	03081512	Thread take - up shaft stop block - 14.8 - 20N
10	72100202	Self - buckling part

Item	Stock Number	Stock Number
10	72011010	Locking hook
11	72100201	Take - up lever
11	72011003	Take - up lever with white ceramic sleeve
12	72100205	Self - buckling spring
12	03081503VA	Positioning block torsion spring
13	72100203	Separator
14	03081222	Color change plate assembly - 21N
14	01213122	Color change aluminum plate - 15
15	03081511	Take - up shaft stop block - 10
15	03081505	Take - up shaft stop block - 15
15	03081505AA	Take - up shaft eccentric stop block - 15
16	03080102	Needle bar spring
17	01222113	Rubber cushion - 6 holes
17	01222114	Rubber cushion - 9 holes
18	03080160-02	Needle bar
19	01222105	Upper dead point clamp

05 Needle Bar Case

Item	Stock Number	Stock Number
20	01222106	Needle bar connecting PIN
21	03080108	Presser foot spring
22	03080165	Adjustable presser foot
23	01221606	Three - hole felt - 1
24	01222110	Rubber cushion
25	01222183AA	Needle clamp screw
26	80621111	Needle - DBXK5 - 11
27	01222194	Needle clamp
28	7222200260	Middle thread guide assembly - 21N
28	7222150260	Middle thread guide assembly - 15N
29	03081326-PY	Needle bar case lower panel - thread lock - 21 needle
29	01221335-PY	Needle bar case front lower panel - thread clamping - 15N
30	03111202	Bracket - tension spring
31	7501100111	LED light board - 20N
31	7501060115	LED light board - 15
32	03112013	20N lamp cover - lower thread guide - thread clamping

Item	Stock Number	Stock Number
32	03111513	15N lamp cover - lower thread guide - thread clamping
33	03112161A	Thread clamping assembly - ceramic bar type - 21NL
33	03111561	Thread clamping assembly - ceramic bar type - 15NL
34	03090722	Side pressure plate - LED - 2T
35	03081120	Needle bar case - 21N
35	4006011500	Needle bar case - 15N
S1	80746408	Large round head phillips screw M4 × 8
S2	80746306	Large round head phillips screw M3 × 6
S3	80742406AA	Large round head phillips screw M4 × 6 - serrated
S4	80880506	Hexagon socket set screw M5 × 6
S5	80813408	Hexagon socket head cap screw M4 × 8 - stainless steel
S6	80746506	Large round head phillips screw M5 × 6
S7	80810408	Hexagon socket head cap screw M4 × 8 - black
S8	80746305	Large round head phillips screw M3 × 5
S9	80540202	Phillips pan head screw M3 × 6
S10	80813425	Hexagon socket head cap screw M4 × 25 - stainless steel

06 Color Change

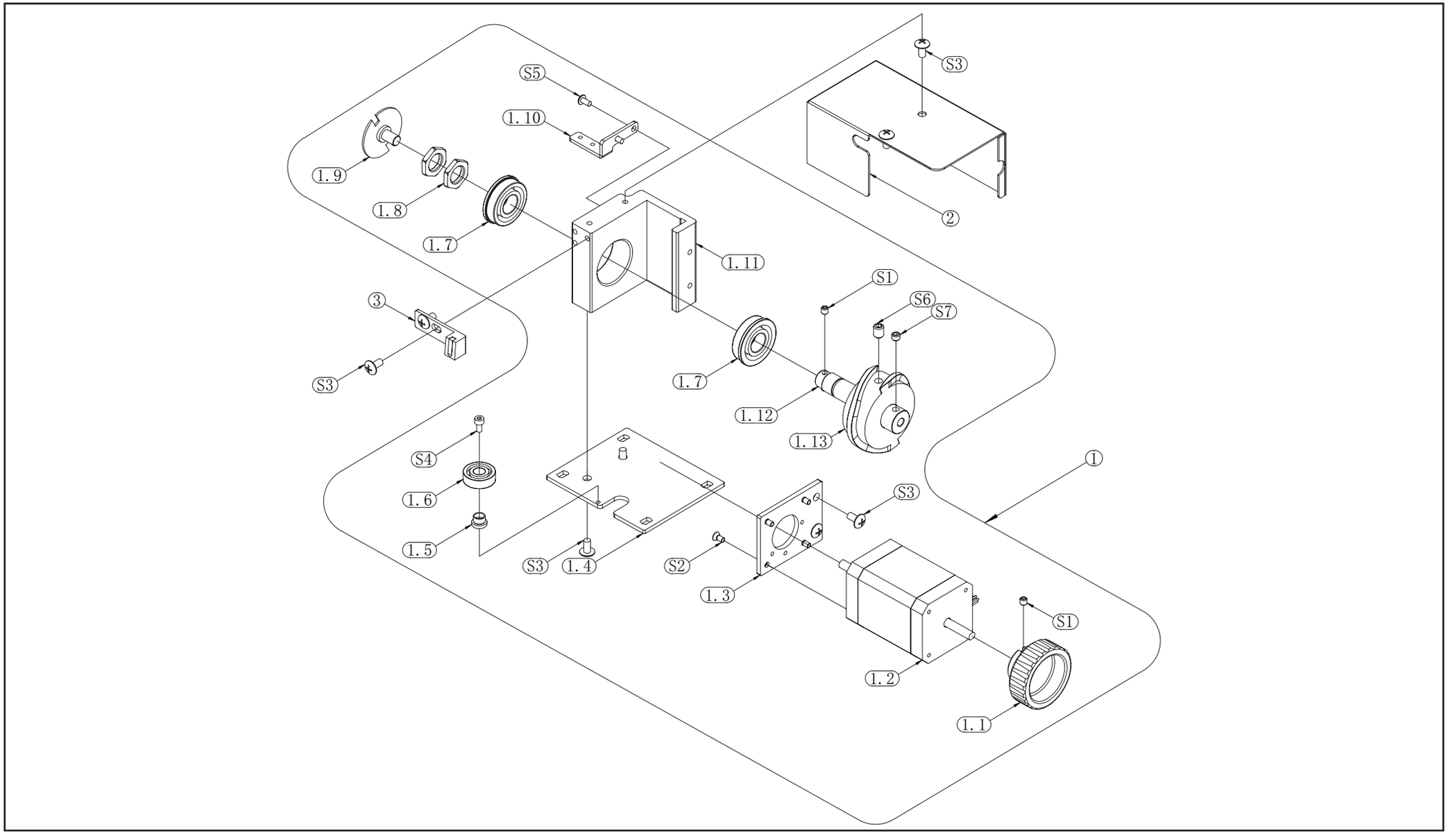

06 Color Change

Item	Stock Number	Stock Number
1	01293862AB	42 Stepper - color change assembly - semi rotary
1.1	03040511RA	Color change handle
1.2	01293863	Color change motor - 42 stepper
1.3	03040701	Head motor plate
1.4	01293801	Color change base plate - high speed head - 42
1.5	01293840	PIN - color change bearing
1.6	80030722	Deep groove bearing 19 - 7 - 6
1.7	80031224	Flange bearing 12 × 28 × 8
1.8	01293836	Nut M12 × 1 × 3
1.9	03040515	Half turn baffle - 20N
1.10	03040514	Sensor bracket - half turn - 20N
1.11	03040540	Bearing base - color change
1.12	03040528VA	Shaft - color change cam
1.13	01293812	Color change cam
2	3011100341	Cover - color change
3	03040543AA	Needle position magnet holder - hall

Item	Stock Number	Stock Number
S1	80880404BA	Hexagon socket set screw M4 × 4
S2	80860326	Countersunk cross screw M3 × 6
S3	80746408	Large round head phillips screw M4 × 8
S4	80810306	Hexagon socket head cap screw M3 × 6 - black
S5	80746306	Large round head phillips screw M3 × 6
S6	80880608	Hexagon socket set screw M6 × 8
S7	80880504	Hexagon socket set screw M5 × 4

07 Thread Trimming

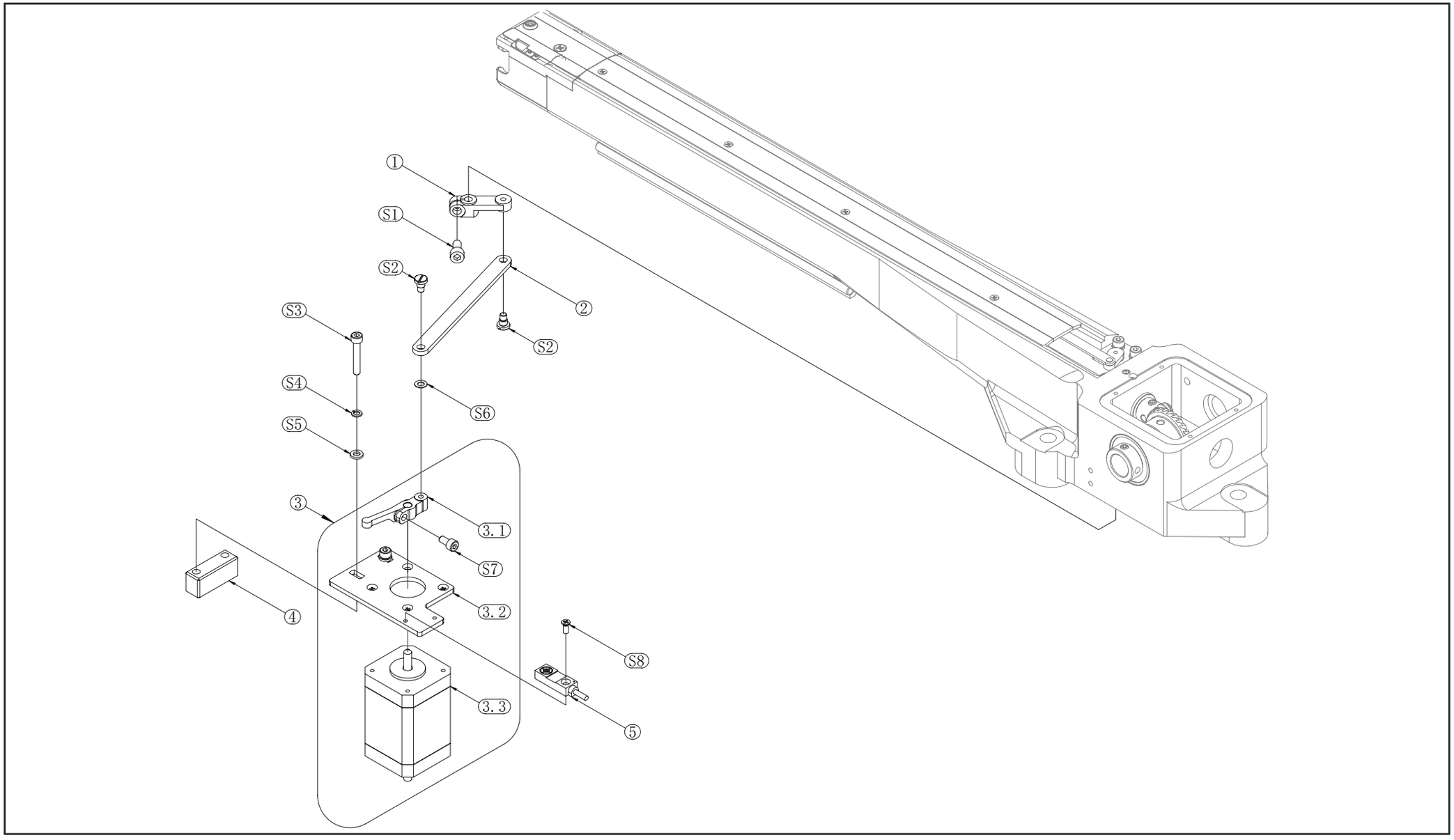

07 Thread Trimming

Item	Stock Number	Stock Number
1	01400311	Moving cutter rod chuck
2	3011150143	Trimming linkage
3	03021281	Trimming motor section - L600
3.1	03021213	Trimming motor drive arm - P
3.2	03021206	Mounting plate - trimming motor
3.3	03021291	Trimming motor - 42 stepper
4	3011150208	Trimming spacer
5	80333601	Micro proximity switch
S1	80810510	Socket head cap screw M5 × 10 - black
S2	80924211	Shoulder screw M4 × 4 - 5 × 3.5
S3	80900406	Graphite nylon washer M4 × 8 × 0.25
S4	80813425	Socket head cap screw M4 × 25 - stainless steel
S5	80900418	Spring washer M4 - stainless steel
S6	80900401	Flat washer M4 - stainless steel
S7	80810408	Socket head cap screw M4 × 8 - black
S8	80860328	Countersunk head phillips screw M3 × 8 - stainless steel

Item	Stock Number	Stock Number

08 Y Drive

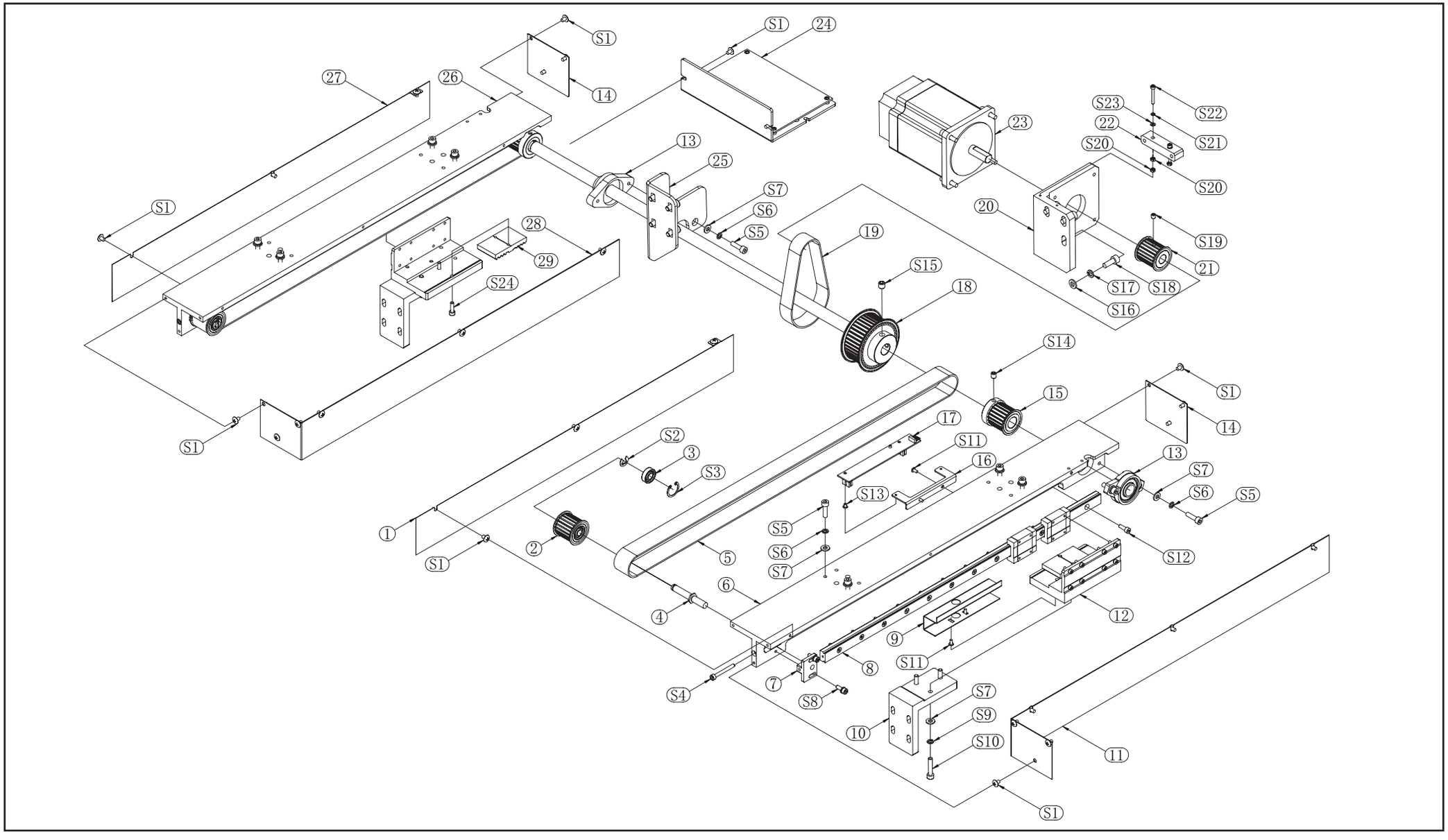

S1
24
27
26
14
13
25
S7
S6
S5
23
S23
22
S22
S21
S20
20
S19
21
S17
S18
S16
19
S15
18
28
29
S24
S14
15
17
S11
16
S13
S2
3
S3
1
2
5
6
4
S4
7
8
S8
9
S12
12
S9
S10
10
11

08 Y Drive

Item	Stock Number	Stock Number
1	3012212032	Cover L - Y drive - STM
2	3012212391	Timing pulley - driven
3	80030822	Deep groove ball bearing 19 - 8 - 6
4	3012212013	Driven pulley shaft
5	80025521	Timing belt S5M - W25
6	3012212001	Drive guide rail L - Y - STM - 380
7	3012212012	Mounting base - tension pulley - STM
8	80015113	Guide rail brh15 - 490
9	3012212041	Limit baffle - STM - Y
10	3012212011	Connecting plate - XY - STM
11	3012212034-PY	Cover LB - Y - drive - STM
12	3012212010	Connecting plate - Y - STM
13	80039011	Bearing UFL002 - D15
14	3011212036-Py	Front rear cover of guide rail
15	3012212392	Timing pulley S5M - 20 - 25 - H15
16	3011212031	Bracket - limit

Item	Stock Number	Stock Number
17	7501040111	Limit sensor - XY
18	3012212390	Timing pulley S5M-40-25
19	80025512	Rubber timing belt S5M-310-20
20	3012212322	Motor base - Y - 86
21	3011200193AA	Timing pulley - main motor
22	3011212323	Adjustment base - tension - motor base
23	80308701	Closed - loop stepper motor
24	7501030163	3 - in - 1 closed - loop stepper driver
25	3012212316	Bearing base
26	3012212002	Drive guide rail R - Y - STM - 380
27	3012212033-PY	Cover RB - Y - drive - STM
28	3012212031-PY	Cover R - Y - drive - STM
29	3012212014	Tooth - shaped press plate - Y - STM
S1	80746406	Screw M4 × 6
S2	80030872	E - ring retaining ring φ7
S3	80031981	Circlip 19

08 Y Drive

Item	Stock Number	Stock Number
S4	80813435	Hexagon socket caphead screw M4 × 35 - stainless steel
S5	80810518	Hexagon socket caphead screw M5 × 18 - black
S6	80900513	M5 spring washer - black
S7	80900501	M5 flat washer-stainless
S8	80813471	Hexagon socket caphead combination screw M4 x 12
S9	80900518	M5 spring washer
S10	80813525	Hexagon socket caphead screw M5 × 25
S11	80746306	Large round head phillips screw M3 × 6
S12	80810412	Hexagon socket caphead screw M4 × 12 - black
S13	80742304	Flange - type half-round phillips screw M3 × 4
S14	80880608	Hexagon socket set screw M6 × 8
S15	80880808	Hexagon socket set screw M8 × 8
S16	80900601	M6 plain washer
S17	80900618	M6 spring washer
S18	80810616	Hexagon socket caphead screw M6 × 16 - black
S19	80880506	Hexagon socket set screw M5 × 6

Item	Stock Number	Stock Number
S20	80900328	M3 nut
S21	80900318	M3 spring washer
S22	8081000328	Hexagon socket caphead screw M3 × 35 - black
S23	80900301	M3 plain washer
S24	80813414	Hexagon socket caphead screw M6 × 14

09 X Drive

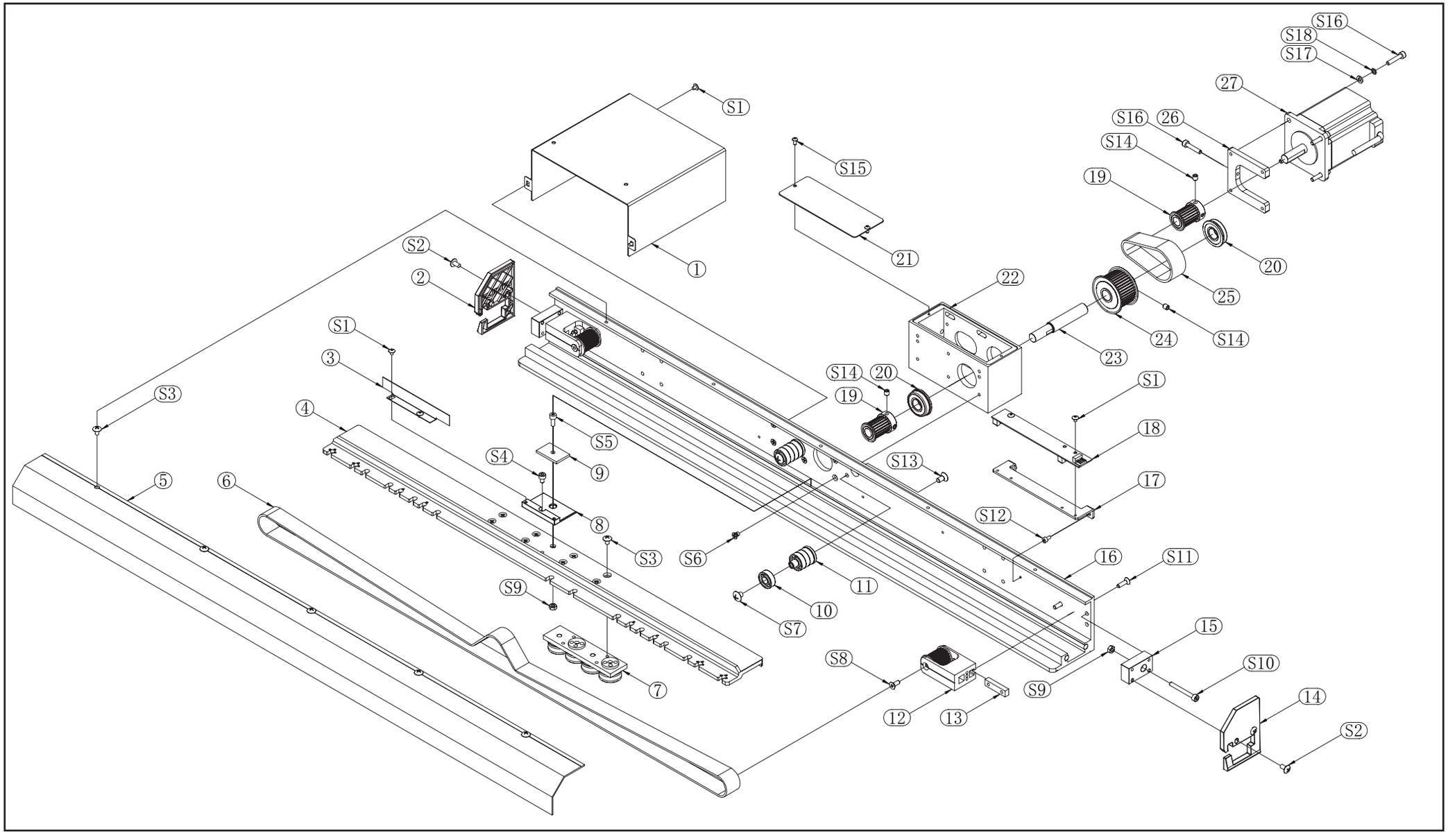

S16
S18
S17
27
S16
26
S14
19
20
25
24
S14
23
22
S1
S15
21
1
S2
2
S1
3
S3
4
5
6
S5
S4
9
8
S3
S6
S9
7
S14
20
19
S13
S1
18
17
S12
16
S11
11
10
S7
S8
12
13
S9
15
S10
14
S2

09 X Drive

Item	Stock Number	Stock Number
1	3012211131-PY	Motor cover - X - STM
2	3012211134	X end cover - model 62 - L
3	3012211113	Baffle - X
4	3012211114	Connecting plate - STM
5	3012211132	Drive housing cover - STM - 1T
6	80025703	Belt
7	3012211142	Slide carriage
8	3012211111	Belt cushion plate - 3M
9	3012211112	Belt press plate - S3M - 20
10	80030821	Bearing 688AE
11	3011211305	Driven shaft - MT - X - middle
12	3012211152	Driven pulley assembly - S3M - 20
13	3012211122	Driven pulley seat fixing press plate
14	3012211133	X end cover - model 62 - R
15	3012211141	Tension limit block A
16	3012211143	Drive bracket - STM

Item	Stock Number	Stock Number
17	3012211115	Mounting bracket - limit - X
18	7501040111	Limit sensor - XY
19	3012211103	Timing pulley S3M - 20 - 10
20	80031224	Flange bearing 12 × 28 × 8
21	3012211102	Motor base cover plate
22	3012211101	Motor mounting base - 60
23	3012211105	Drive shaft
24	80025804	Drive pulley S3M - 40 - 12
25	80025702	Timing belt
26	3012211104	Motor nut plate
27	80306102AA	Closed - loop stepper motor
S1	80746304	Large round head phillips screw M3 × 4
S2	80746408	Large round head phillips screw M4 × 8
S3	80746406	Large round head phillips screw M4 × 6
S4	80810406	Cylinder head hexagon screw M4 × 6
S5	80810410	Cylinder head hexagon screw M4 × 10

09 X Drive

Item	Stock Number	Stock Number
S6	80860406	Countersunk phillips screw M4 × 6
S7	80746506	Large round head phillips screw M5 × 6
S8	80865410	Countersunk socket cap screw M4 × 10
S9	80900428	M4 nut
S10	80813435	Cylinder head hexagon screw M4 × 35
S11	80865408	Countersunk socket cap screw M4 × 8
S12	80810306	Cylinder head hexagon screw M3 × 6
S13	80866510	Countersunk socket cap screw M5 × 10
S14	80880506	Hexagon socket set screw M5 × 6
S15	80763306	Half - round head phillips screw M5 × 6
S16	80810420	Cylinder head hexagon M4 × 20 - black
S17	80900401	M4 plain washer
S18	80900413	M4 spring washer - black

Item	Stock Number	Stock Number

10 Thread Stand

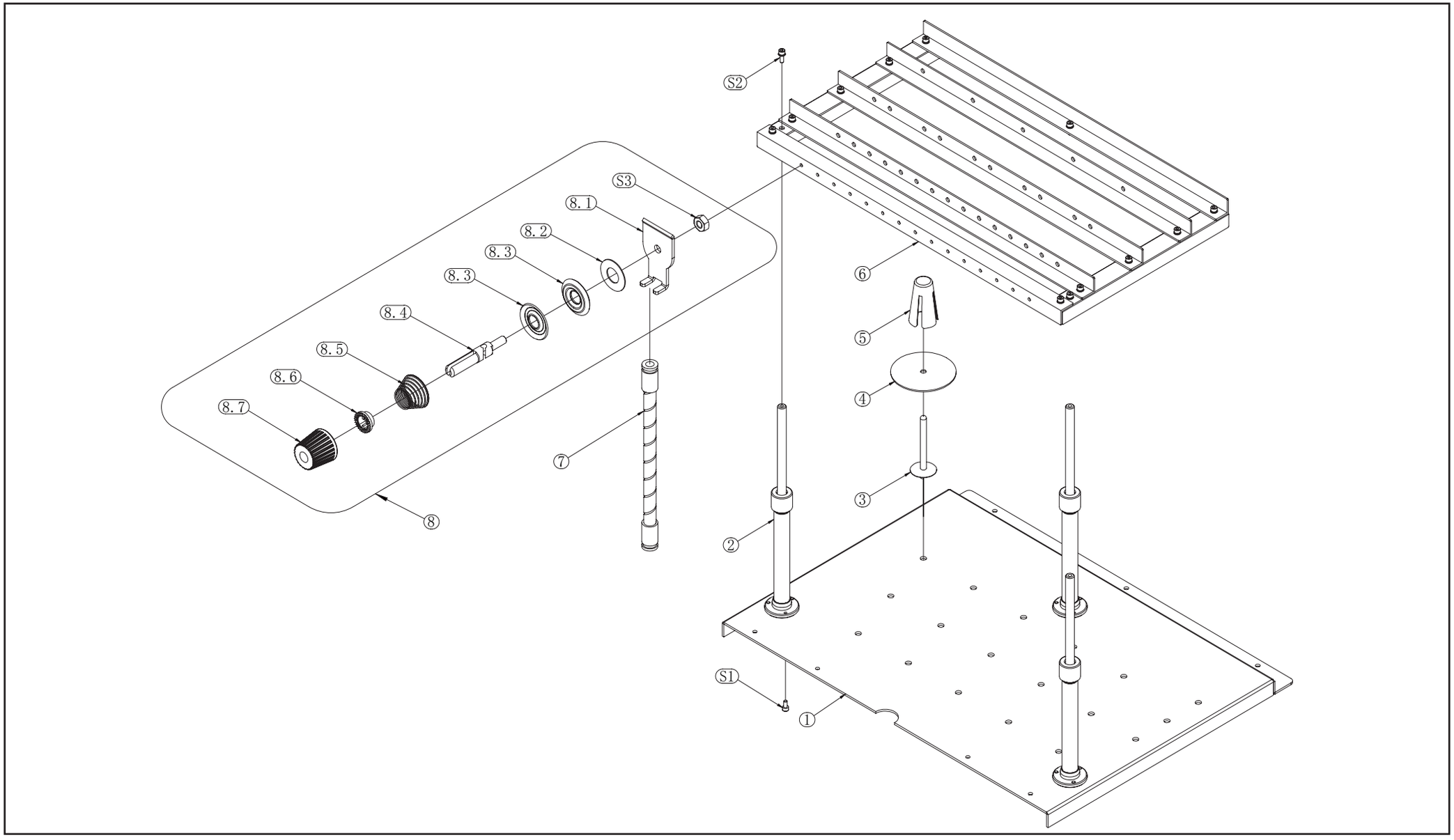

10 Thread Stand

Item	Stock Number	Stock Number
1	3012101110-PY	Thread plate - 15N - STM - 1T
1	3012101106-PY	Thread plate - 20N - STM - 1T
2	03044152AB	Lifting stand - aluminum alloy
3	80211007AA	Thread spool pole
4	80211009VA	Thread plate pad
5	80211010	Copper wire positioning bushing
6	3012101141	Thread stand - 15N - STM - 1T
6	3012101142	Thread stand - 20N - STM - 1T
7	72211627	Thread tube - 270
8	4112010007	Thread stand knob components - 425C
8.1	4112010017	Thread guide plate - wheel
8.2	4112010016	Felt gasket - thread stand knob
8.3	4112010015	Thread pressing piece - wheel
8.4	4112010018	Knob pole - wheel
8.5	4112010014	Tension spring – wheel
8.6	4112010013	Locking washer

Item	Stock Number	Stock Number
8.7	4112010012	Tension knob - wheel
S1	80813408	Hexagon socket caphead screw M4 × 8
S2	80813471	Hexagon socket head cap combination screw M4 x 12
S3	80900428	M4 nut

11 Thread Tension Base

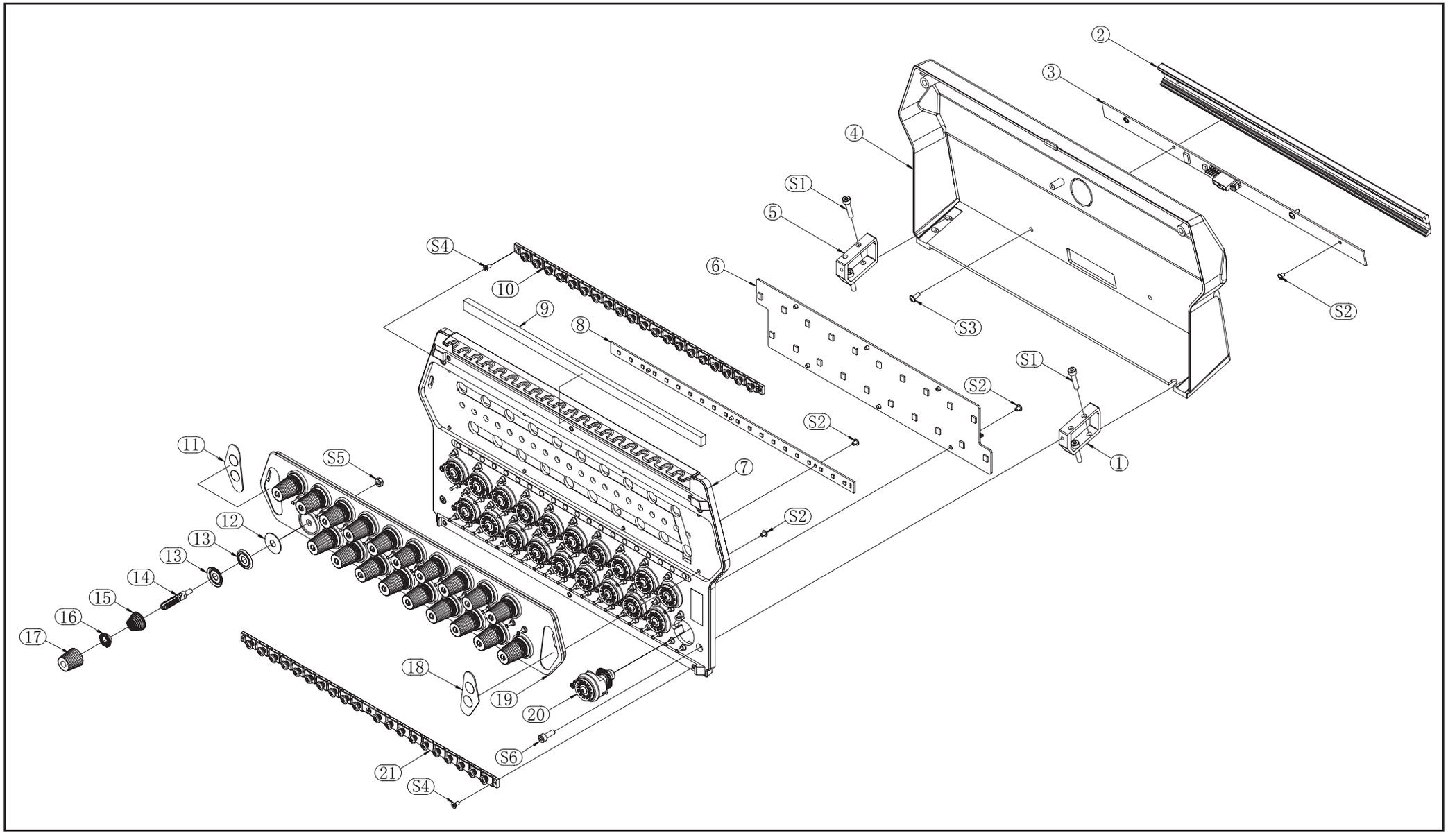

11 Thread Tension Base

Item	Stock Number	Stock Number
1	7222200132	Bracket - R - 20N thread tension base
1	7222150142	Bracket - R - 15N thread tension base
2	7222200211	Mounting base - needle position detection board - 21N
2	7222150211	Mounting base - needle position detection board - 15N
3	7501040121	Needle position detection board - 20N
3	7501040124	Needle position detection board - 15N
4	7222200103	Thread tension base rear cover - 20N
4	7222150104	Thread tension base rear cover - 15N
5	7222200131	Bracket - L - 20N thread tension base
5	7222150141	Bracket - L - 15N thread tension base
6	7501061134	Thread break detection board - hall - 20N
6	7501061132	Thread break detection board - hall - 15N
7	7222200107	Thread tension base panel - 21N
7	7222150102	Thread tension base panel - 15N
8	7501100111	Light board - LED - 20N
8	7501060115	Light board - LED - 15N

Item	Stock Number	Stock Number
9	7222200109	Felt - thread tension base – 20N
9	7222150105	Felt - thread tension base – 15N
10	7222200108	Thread course strip module - upper - 21N
10	7222150103	Thread course strip module - upper - 15N
11	7501100130	Key membrane - embroidery mending
11	7501100130AA	Key membrane - embroidery mending - chinese
12	3006140114	Felt - tensioner
13	72210702	Press piece
14	72210701	Tension bolt - small knob
15	72210703	Small spring
16	72210704	Lock washer - small knob
17	72210705	Adjusting knob - small knob
18	7501100131	Key membrane - trimming
18	7501100131AA	Key membrane - trimming - chinese
19	7222200102	Adjusting nut panel - 21N
19	7222150106	Adjusting nut panel - 15N

11 Thread Tension Base

Item	Stock Number	Stock Number
20	7222200110	Break thread base - magnetic
21	7222200106	Thread course strip module - lower - 21N
21	7222150101	Thread course strip module - lower - 15N
S1	80813420	Cylindrical head hexagon socket screw M4 × 20
S2	80742305	Flanged pan head phillips screw M3 × 5
S3	80742308	Flanged pan head phillips screw M3 × 8
S4	80860326	Flat head philips screw M3 × 6
S5	80900432	M4 lock nut
S6	80813412	Hexagon socket head cap screw M4 × 12

Item	Stock Number	Stock Number

12 Lower Frame

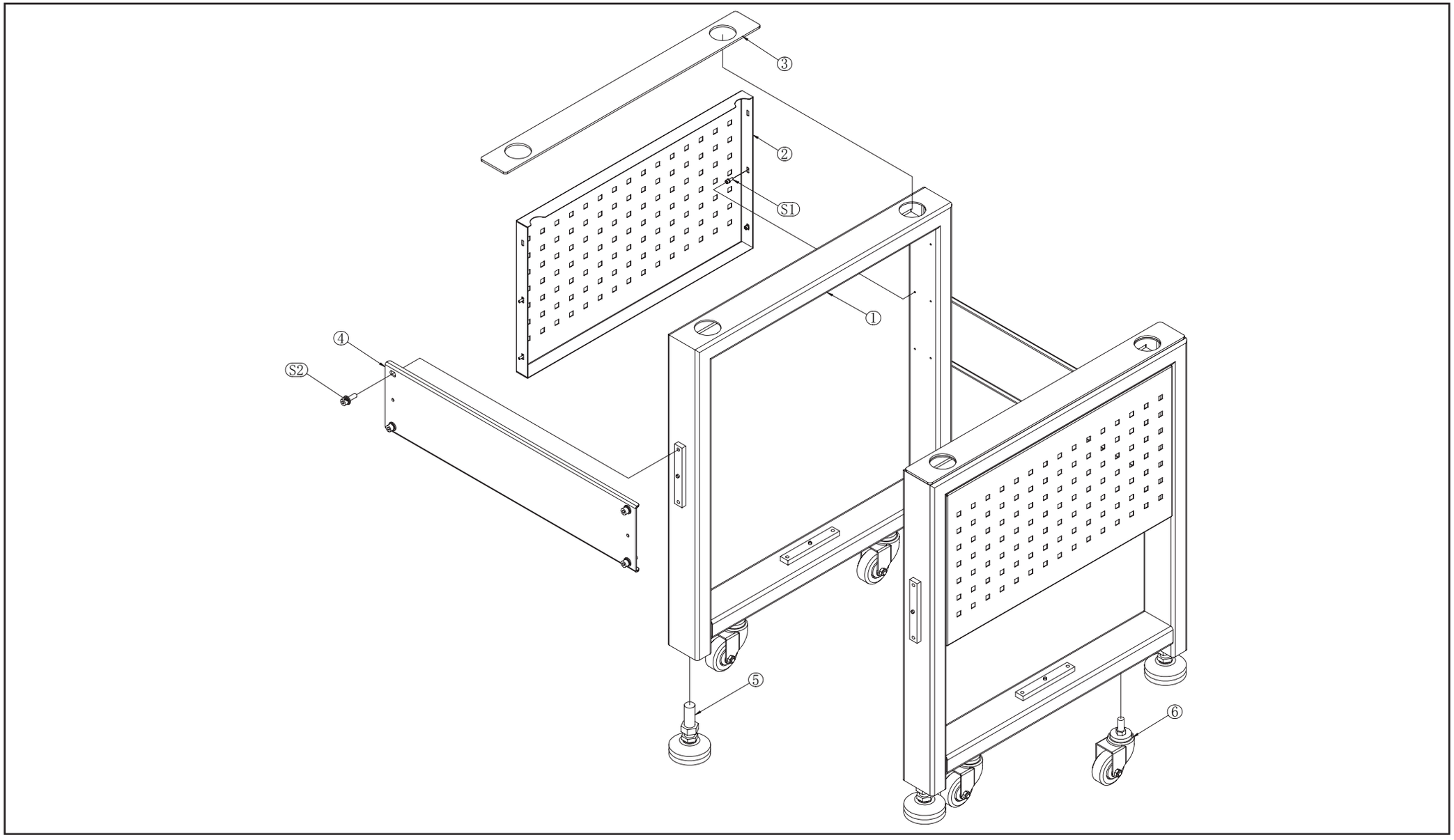

12 Lower Frame

Item	Stock Number	Stock Number
1	3012100201-PY	Side frame - lower frame - STM
2	3012100231-PY	Grid plate - STM
3	3012100221	Rubber shock pad - frame - STM
4	3012100204-PY	Connecting plate - lower frame - 1T
5	80270921	Universal adjustable foot
6	80270501	Screw lever truckle
S1	80813471	Hexagon socket head cap combination screw M4 × 12
S2	80813825AA	Hexagon socket head cap combination screw M8 × 25

Item	Stock Number	Stock Number

13 Control Panel

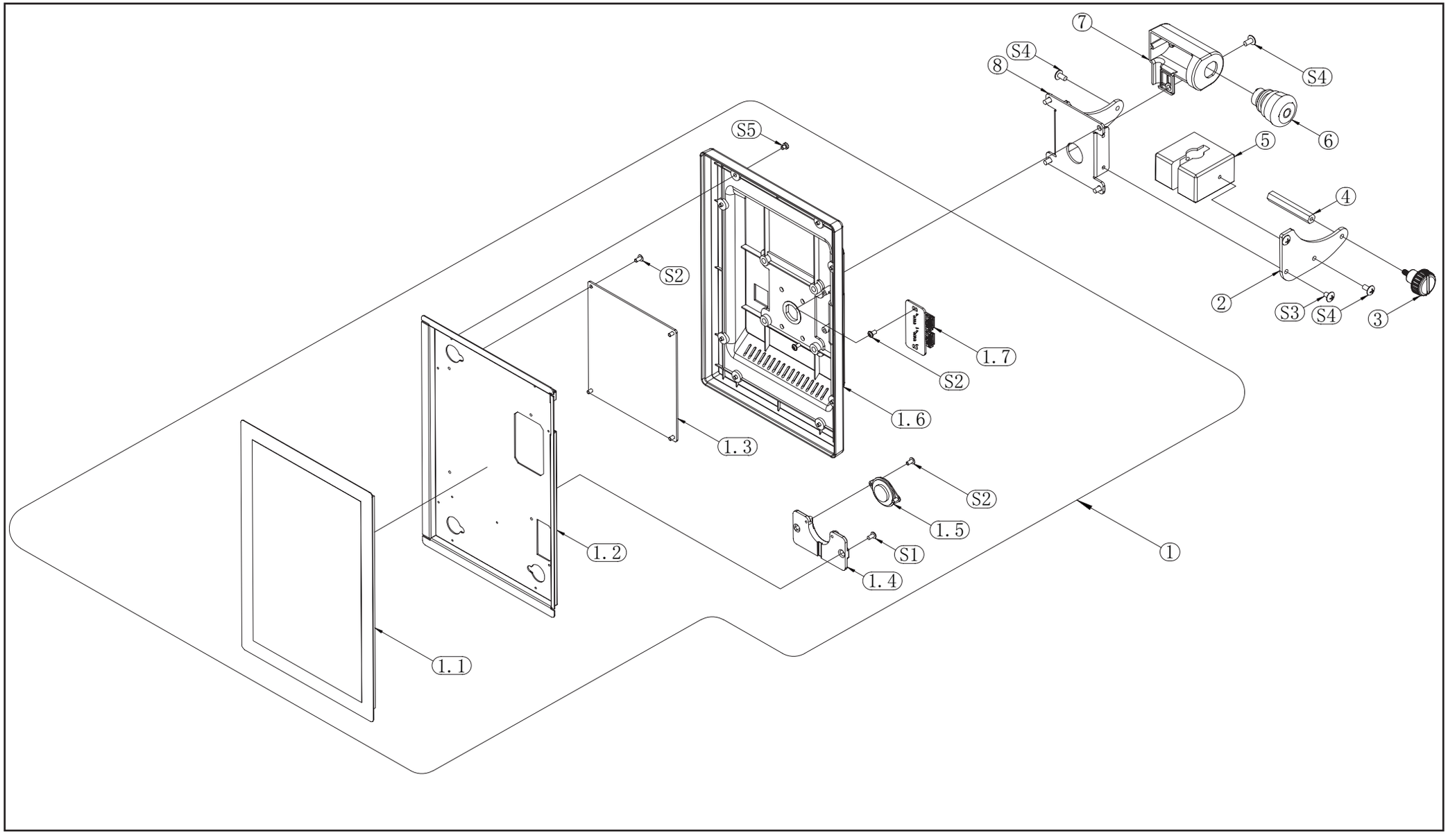

13 Control Panel

Item	Stock Number	Stock Number
1	7501011061	10S control panel
1.1	7501011004	Screen
1.2	7501011022	Support plate - touch screen
1.3	7501011002	Main board of 10S control panel
1.4	7501011023	Mounting base - wireless - 10S
1.5	7501011005	Speaker
1.6	7501011021	Back cover – 10S control panel
1.7	7501011003	Usb interface board
2	3011310123	Bracket B - control panel
3	3006092121-425C	Rubber head screw
4	3011310126	Positioning shaft - control panel bracket
5	3011310125	Fixing base - control panel
6	80350401	Emergency stop button - LA16
7	7501011024	Mounting base - emergency stop - 10S
8	3011310122	Bracket C - control panel
S1	80746306	Large round head phillips screw M3 × 6

Item	Stock Number	Stock Number
S2	80742306	Flange semi - circular cross screw M3 × 6
S3	80746406	Large round head phillips screw M4 × 6
S4	80746408	Large round head phillips screw M4 × 8
S5	80740304	Small round head phillips screw M3 × 4

14 Electronic Control

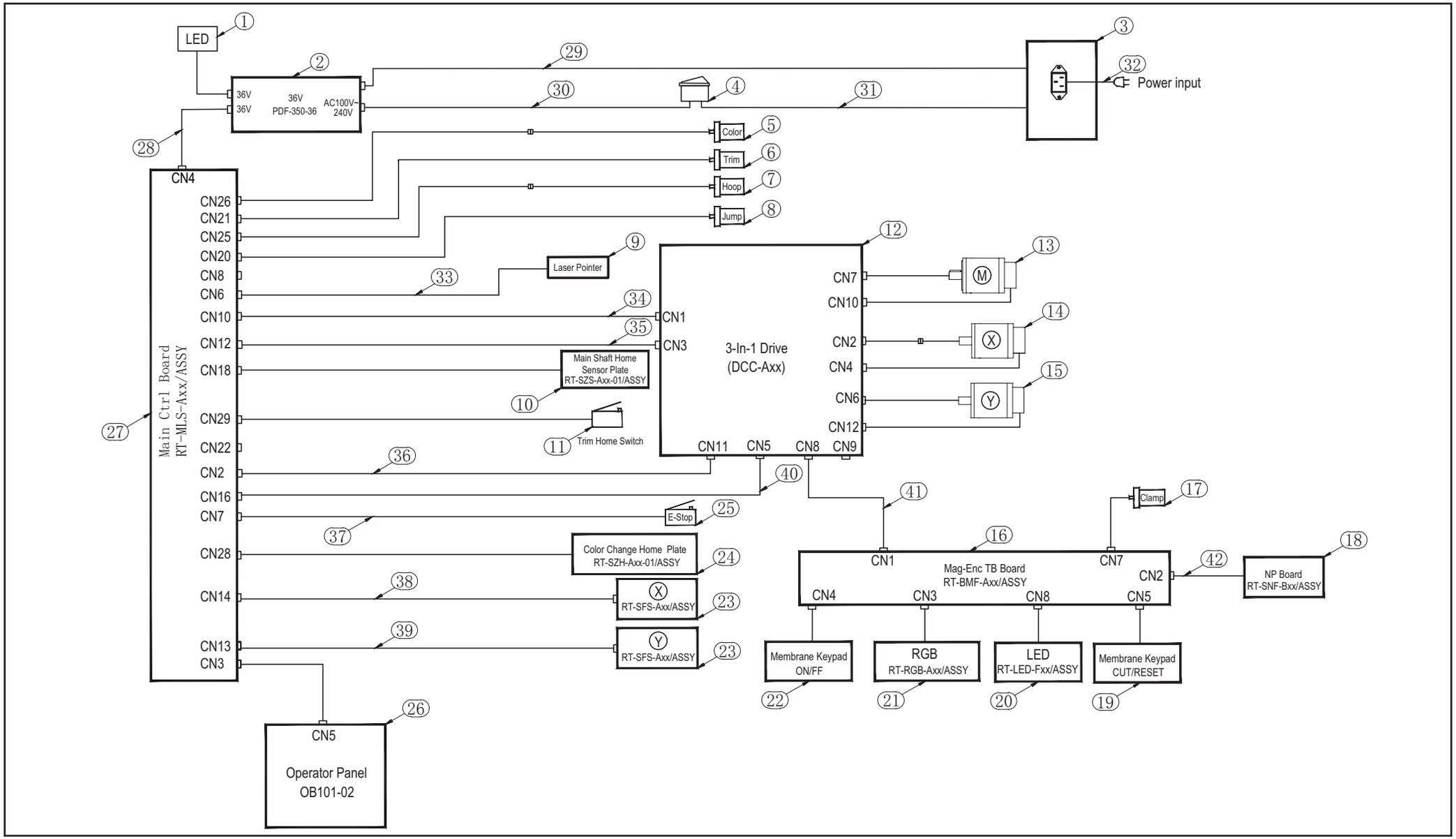

14 Electronic Control

Item	Stock Number	Stock Number
1	80240105AA	LED double - row fluorescent lamp
2	80380641	Switching power supply
3	03150603	Power connection socket
4	03150602	Power switch
5	01293863	Color change motor - 42 stepper
6	03021291	42 Motor - trimming - L600
7	01431205	Hook motor - 42 stepper
8	80303501	35 two - phase stepper motor
9	05313181	Laser device
10	7501040113AA	Zero position sensor
11	80333601	Micro approximity switch
12	7501030163	Stepper closed - loop driver - 3 - in - 1
13	80310724	Brushless servo motor 70SF3A60 - 340 - 1000Z
14	80306102AA	Stepper closed - loop motor
15	80308701	Stepper closed - loop motor
16	7501061134	Thread break detection board - hall - 20

Item	Stock Number	Stock Number
16	7501061132	Thread break detection board - hall - 15
17	80304261	Stepper motor 42D48C1206EA - 1200
18	7501040121	Needle position detection board - 20N
18	7501040124	Needle position detection board - 15N
19	7501100131	Key membrane - trimming
19	7501100131AA	Key membrane - trimming - chinese
20	7501100111	Light board - LED - 20N
20	7501060115	Light board - LED -15N
21	7501061133	Light board - RFID - 20N
21	7501061131	Light board - RFID - 15N
22	7501100130	Key membrane - embroidery mending
22	7501100130AA	Key membrane - embroidery mending - chinese
23	7501040111	Limit board - XY
24	7501040109	Sensor board - half turn
25	80350401	Emergency switch - LA16
26	7501011061	10S control panel

14 Electronic Control

Item	Stock Number	Stock Number
27	7501020102	Main board
28	7501210214AA	Power supply - main board - power cable
29	7501210213AA	Socket - power supply - ground wire
30	7501210212AB	Switch - power supply - power cable
31	7501210211AA	Socket - switch - power cable
32	80390105	National standard power cord
32	80390103	British standard power cord
32	80390102	EU standard power cord jl301
32	80390101	US standard power cord JL003 - UL mark
33	03154341MT	Laser head - multi function board - power cable
34	7501210102	Main board - 3 in 1 driver - power cable
35	7501210103	Main board - 3 in 1 driver - signal cable
36	7501210217AA	Head board - drive board - communication cable
37	7501210225	Main board - emergency stop - power cable
38	7501210106	Main board - X limit sensor - signal cable
39	7501210108AA	Main board - Y limit sensor - signal cable

Item	Stock Number	Stock Number
40	7501210201	Main board - head board - power cable
41	7501210223BA	3 in 1 driver - head board - can communication cable
42	7501210224	Head board - needle position board - signal cable

15 Cap Driver

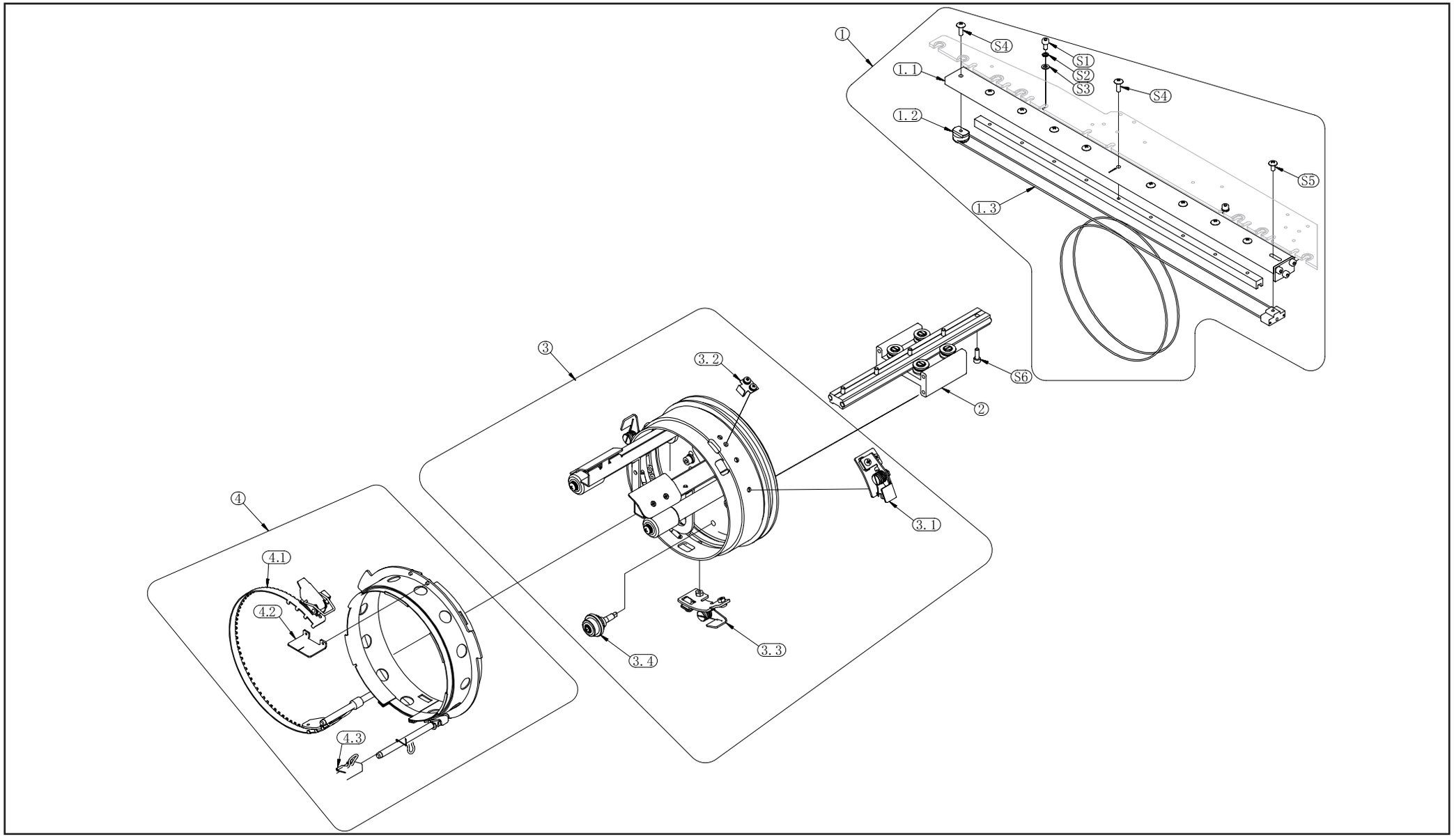

15 Cap Driver

Item	Stock Number	Stock Number
1	02815042	Hat rack drive junction plate kit - P - MT
1.1	02815010	Drive frame
1.2	02815008	Steel wire wheel
1.3	02815052	Hat rack steel wire kit
2	02815039	Linear guide rail set - 220
3	02815082	Hat rack - big shuttle box
3.1	02810270	Clamp head components A
3.2	02810205	Hat rack spacing shrapnel
3.3	02810271	Clamp head components B
3.4	02810161	Eccentric wheel assembly
4	02811080	Cap ring kit
4.1	02811082	Cap strapping rod assembly
4.2	02811006	Positioning block - cap ring
4.3	02811055	Clamp - cap ring
S1	80813410	Hexagon socket caphead screw M4 × 10
S2	80900418	M4 spring washer

Item	Stock Number	Stock Number
S3	80900401	M4 plain washer
S4	80746412	Large round cross screw M4 × 12
S5	80746410	Large round cross screw M4 × 10
S6	80810412	Cylinder head hexagon screw M4 × 12 - black

16 Frame 1

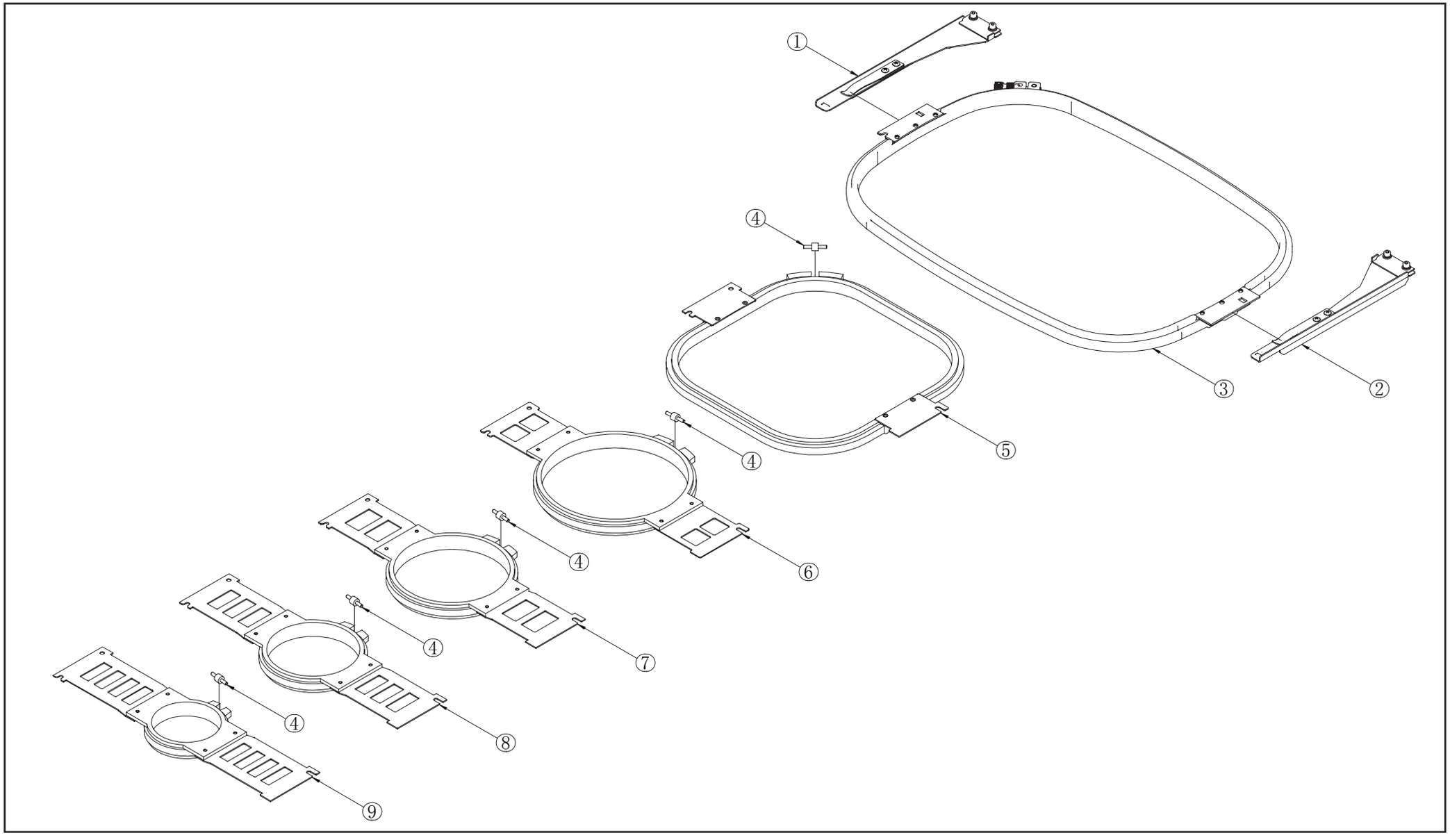

16 Frame 1

Item	Stock Number	Stock Number
1	03100292AA	Frame support module - L
2	03100291AA	Frame bracket module - R
3	03173691VA	Hoop - 540 × 360
4	02540105	PIN screw
5	02540681CB	Hoop CB - 290
6	02540581CB	Hoop CB - 190
7	02540481CB	Hoop CB - 50
8	02540381CB	Hoop CB - 120
9	02540281CB	Hoop CB - 90

Item	Stock Number	Stock Number

16 Frame 2

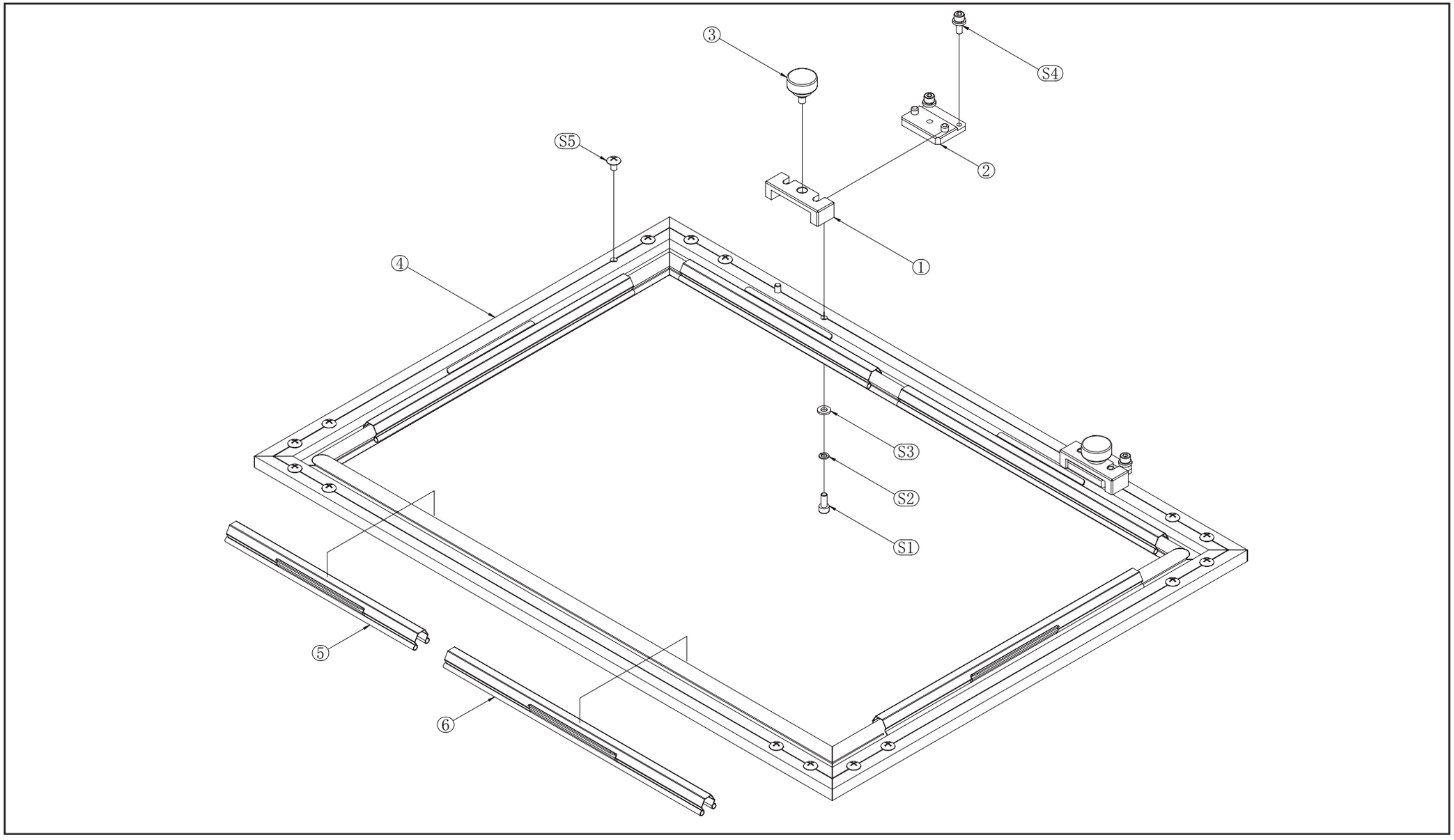

16 Frame 2

Item	Stock Number	Stock Number
1	03100220	Quick - clamp frame mounting base
2	03100223	Mounting base - quick clamp frame
3	03100225	Hand - tightened bolt - quick clamp frame
4	3012311101	Sash frame - STM - 1T
5	01505102	Feed collet - 220
6	01505101	Feed collet - 300
S1	80810512	Hexagon socket head cap screw M5 × 12 - black
S2	80900518	M5 spring washer
S3	80900501	M5 plain washer
S4	80813581	Hexagon socket caphead combination screw M5 x 14
S5	80746508	Large round head phillips screw M5 × 8

Item	Stock Number	Stock Number

17 Table

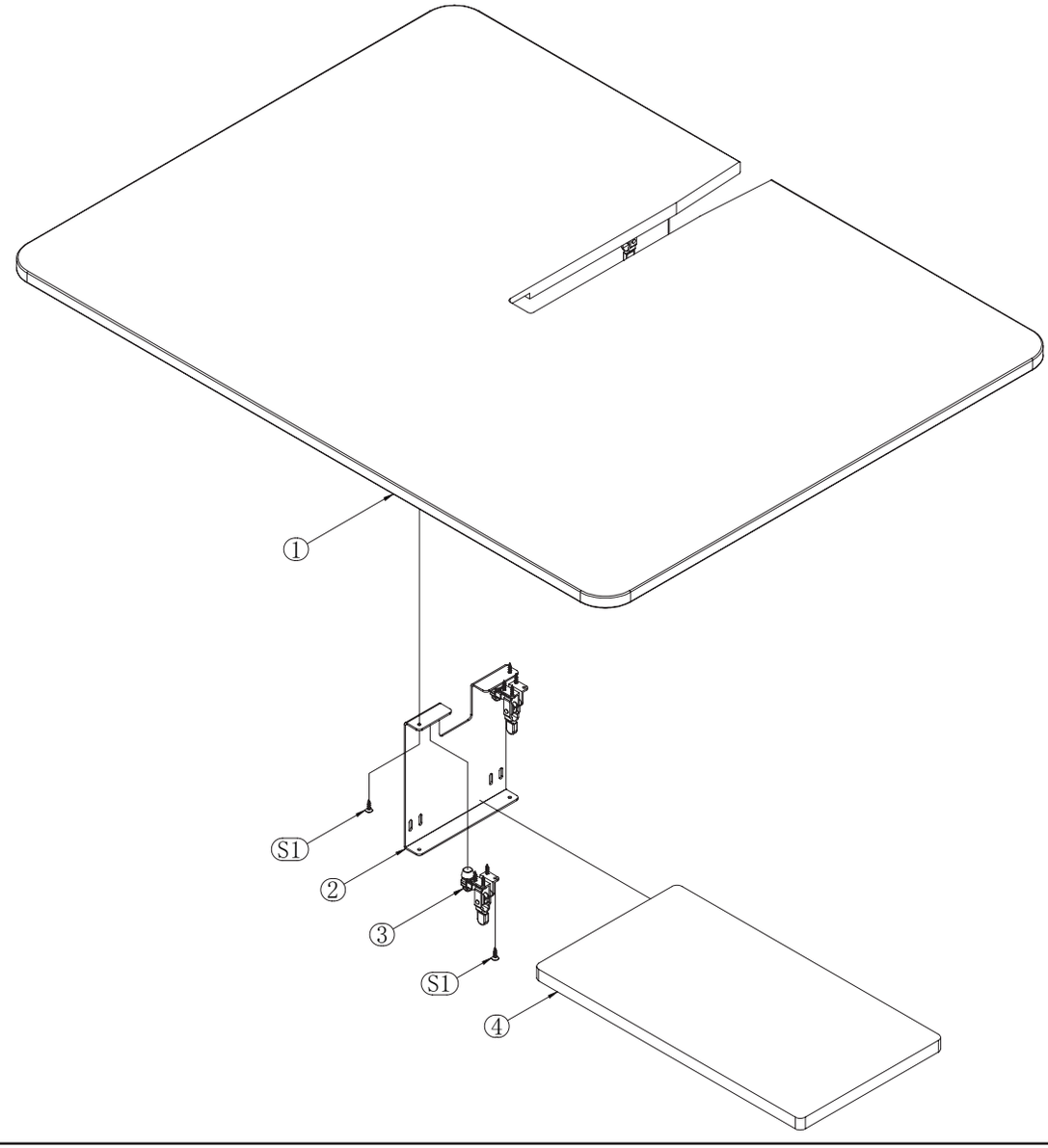

17 Table

Item	Stock Number	Stock Number
1	3012311001	Flat table - STM - 1T
2	3011311011AA-PY	Table bracket B
3	80926011	Clamping fixture
4	3012311002	Lower table - STM - 1T
S1	80700302	Countersunk phillips self - fapping screw M4 × 16 - black

Item	Stock Number	Stock Number