ricoma
THINK BEYOND

HIGH-SPEED FLAT-BED EMBROIDERY MACHINE PARTS BOOK

Applicable model: FP model

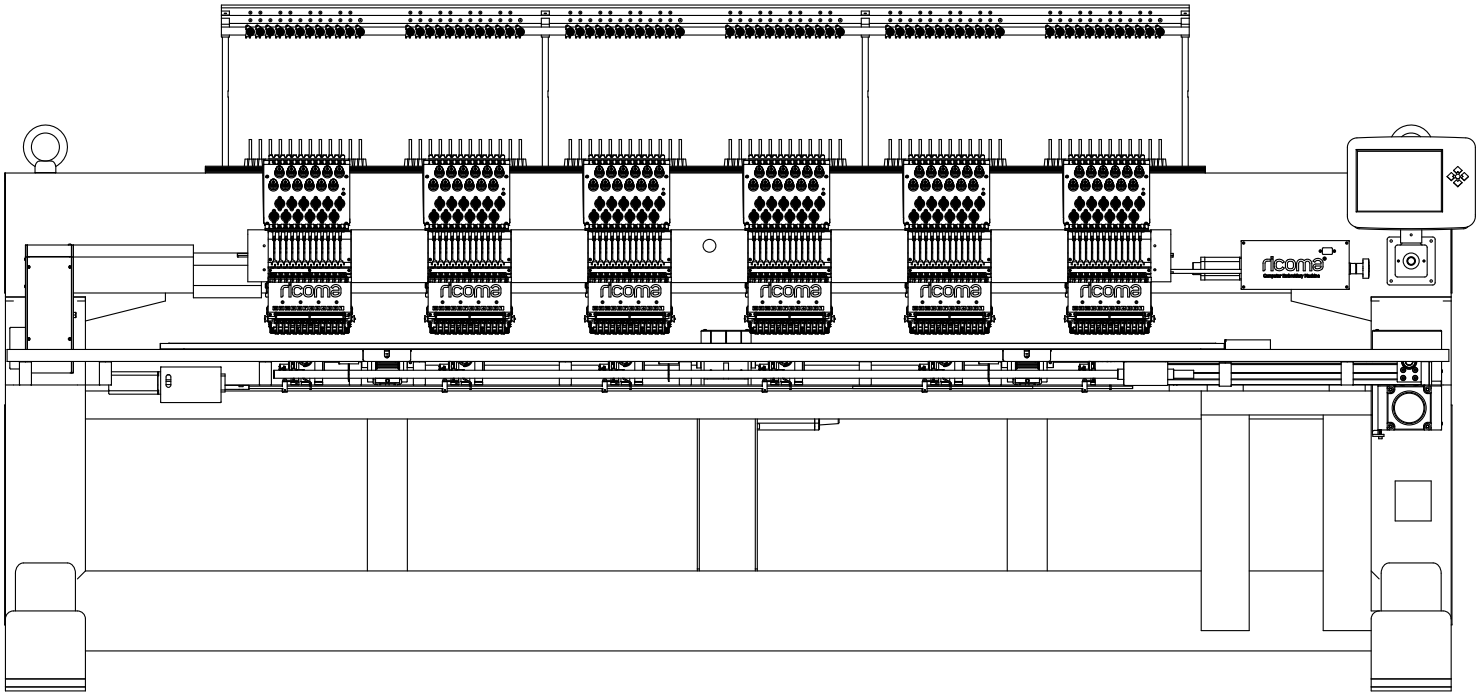

(2023.11.7)
(November 7, 2023)

CONTENTS

Contents.....1-3

Machine Stand.....4

Machine Stand Parts.....5

Machine Table.....6

Machine Table Parts.....7

Main Motor Drive Part.....8

Main Motor Drive Parts.....9

Upper and Lower Shaft Drive Box.....10

Upper and Lower Shaft Drive Box Parts.....11-12

Needle Bar Case.....13

Needle Bar Case Parts.....14-15

Machine Head.....16

Machine Head Parts.....17-18

Jumping Motor.....19

Jumping Motor Parts.....20

Jumping Solenoid.....21

Jumping Solenoid Parts.....22

Rotary Hook Box....23
Rotary Hook Box Parts....24-25
Color Changing Box (6 and 9 Needles)....26
Color Changing Box (6 and 9 Needles) Parts....27-28
Color Changing Box (12 and 15 Needles)....29
Color Changing Box (12 and 15 Needles) Parts....30
Screw Loop Color Changing Box....31
Screw Loop Color Changing Box Parts....32-33
Trimming Box....34
Trimming Box Parts....35
Hooking....36
Hooking Parts....37
XY Servo Drive Box #1....38
XY Servo Drive Box #1 Parts....39
XY Servo Drive Box #2....40
XY Servo Drive Box #2 Parts....41
XY-Axis Drive Base....42

XY-Axis Drive Base Parts.....43-44
Y-Axis Auxiliary Drive Part.....45
Y-Axis Auxiliary Drive Parts.....46-47
Embroidery Frame.....48
Embroidery Frame Parts.....49
Frame Optional Parts.....50
Frame Optional Parts.....51
Wheel (Magnetic Braiding) Thread Tension Base.....52
Wheel (Magnetic Braiding) Thread Tension Base Parts.....53-54
Wheel + Spring Thread Tension Base.....55
Wheel + Spring Thread Tension Base Parts.....56-57
Thread Stand.....58
Thread Stand Parts.....59-60
Electronic Control.....50
Electronic Control Parts.....51

Machine Stand

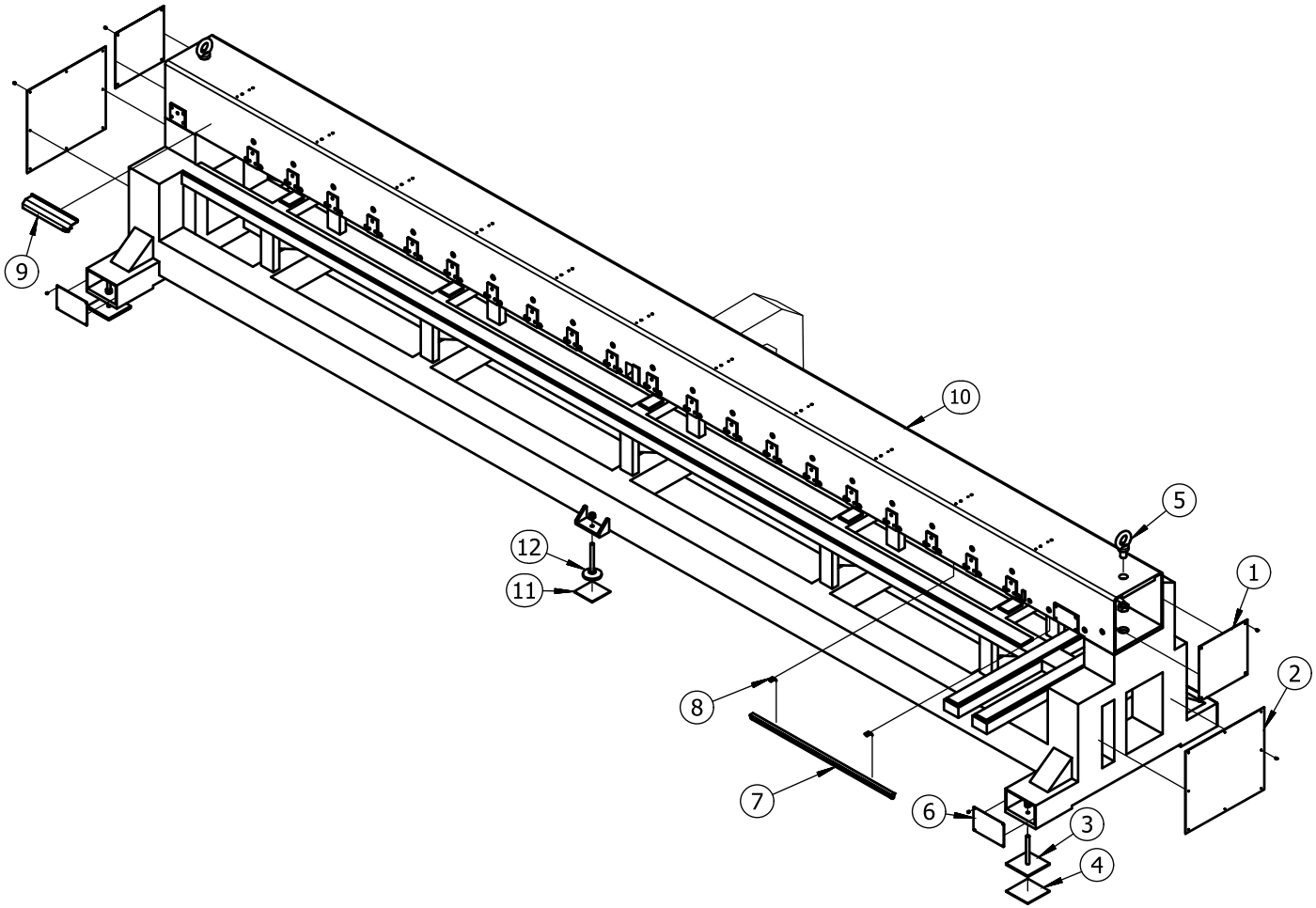

Machine Stand Parts

	Part Number	Description
1	4001070***	Beam cover (x2)
2	40011900**	Covers on left and right sides of truss frame (x2)
3	4001040200	Shock-absorbing baseboard (x4)
4	710203**	Rubber gasket (x2)
5	80920***	Ring (x2)
6	4001*****	Foot beam baffle (xN)
7	802410**	Lamp -LED-**W-**M (xN)
8	4013050003	Bracket- lighting under the beam (xN)
9	4001170***	Upper shaft cover (x1)
10	41010109*******	Plain embroidery frame (x1)
11	71020311	Rubber gasket 150x150x10 (xN)
12	80272101	Round foot pad -YL-125 (xN)

Machine Table

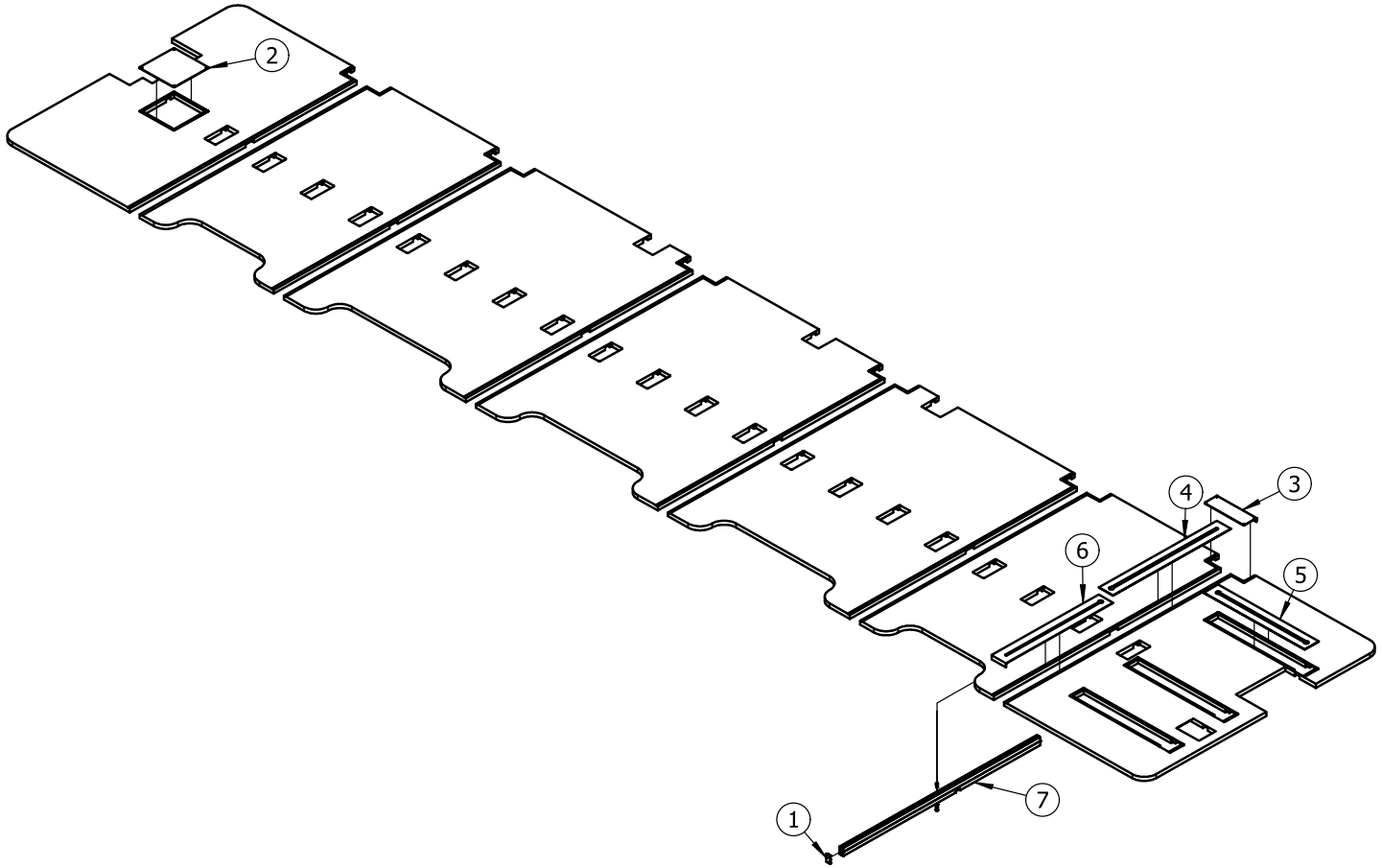

Machine Table Parts

	Part Number	Description
1	01540231V1	Table support plug 25X52-RCM (xN)
2	400205****	Stainless steel cover plate of trimming box (x1)
3	4002040***	Cover plate of driving pulley of drive base (xN)
4	400206****	Y rear stainless steel cover plate (xN)
5	400202****	X rear stainless steel cover plate (xN)
6	400204****	Y front stainless steel cover plate (xN)
7	710113401	Flat embroidery table support (xN)

Main Motor Drive Part

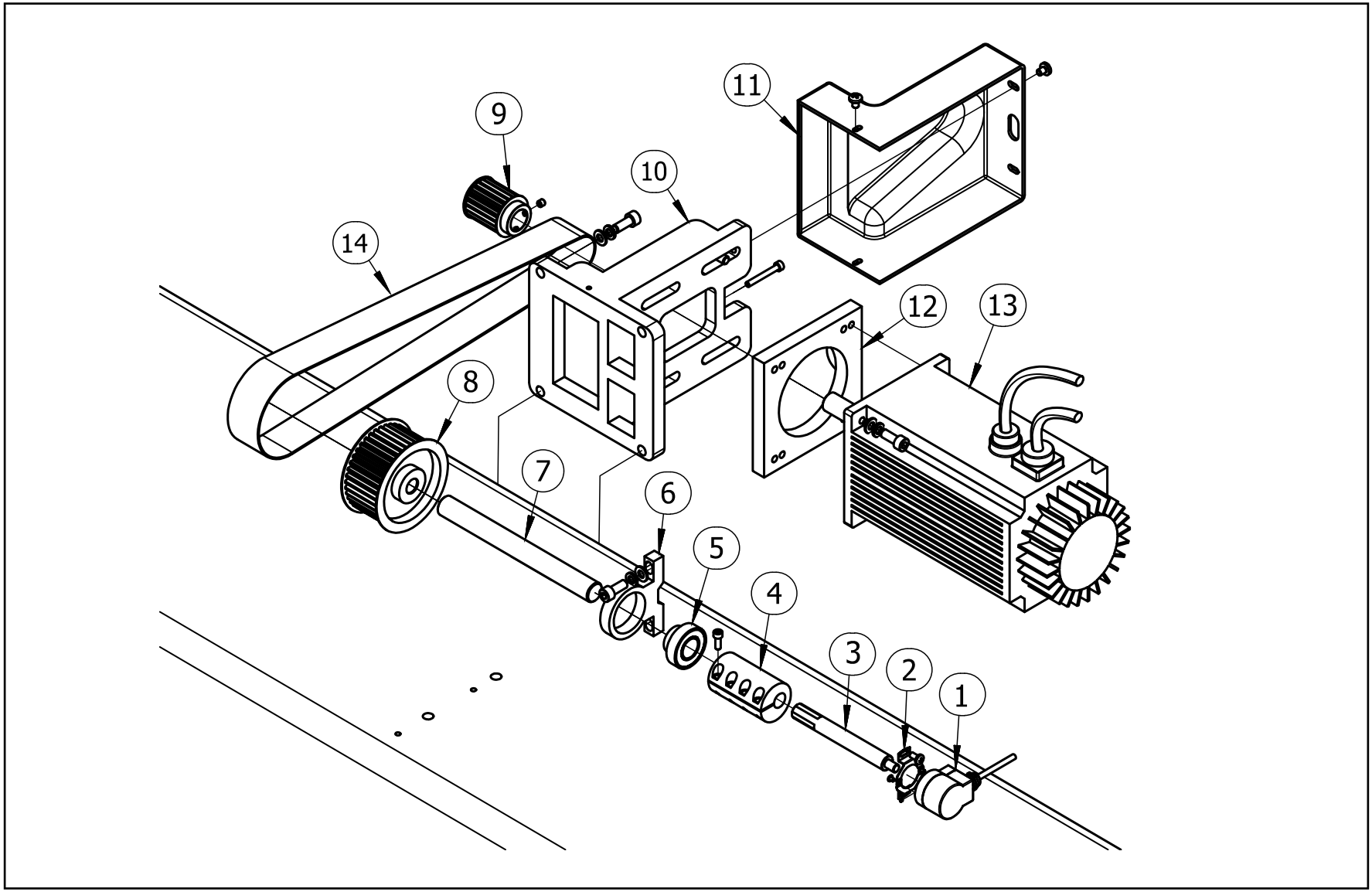

Main Motor Drive Parts

	Part Number	Description
1	80330101	Photoelectric encoder (x1)
2	4103030003	Bracket-encoder (x1)
3	4103030006	Upper shaft-encoder -L2010 (x1)
4	80032006	Coupling-upper shaft (x1)
5	4103010021	Bearing-upper shaft -6004 conjoined (x1)
6	4103010020AAZZ	Bearing base-upper shaft -D42 (x2)
7	80032002XN	Optical axis -φ20 (x1)
8	4103010019	Belt pulley A-44 gear (x1)
9	4103010018	Pulley B-22 gear (x1)
10	4103010024	Motor base B (x1)
11	4103010025	Cover-main motor base (x1)
12	4103010023	Motor base A (x1)
13	8023400***	Main servo motor-SM130-****-D00(BF) (x1)
14	410304****	synchronous belt S5M-****-** (x1)

Upper and Lower Shaft Drive Box

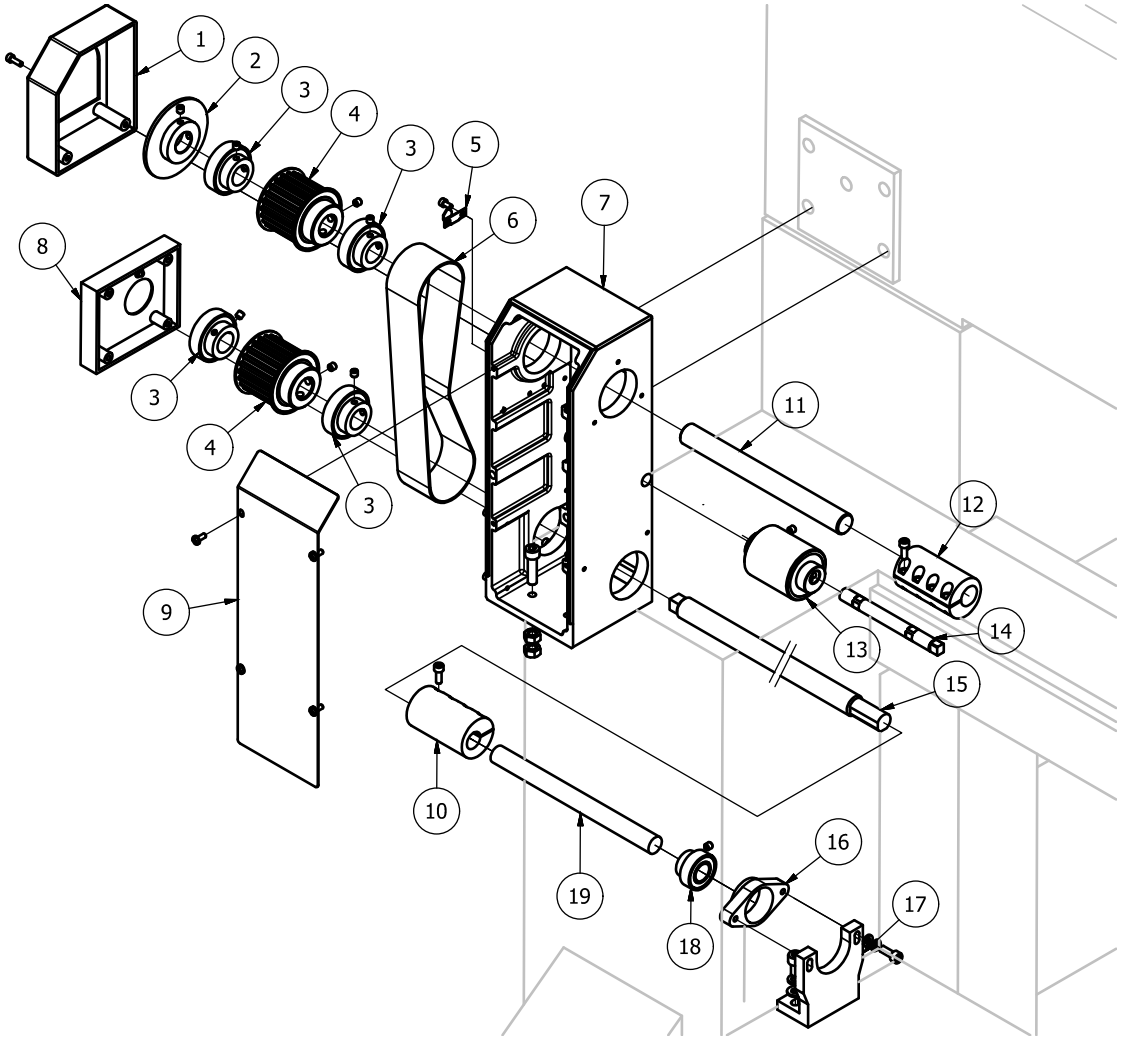

Upper and Lower Shaft Drive Box Parts

	Part Number	Description
1	01053102AA	Dial cover (x1)
2	01053101AA	Dial (x1)
3	4103010021	Bearing-upper shaft -6004 conjoined (x4)
4	01053104AA	Upper and lower synchronous belt pulley (x2)
5	01053103AA	Dial needle (x1)
6	01053105AA	Synchronous belt -STD 600-S8M (x1)
7	01053109AA	Main drive box (x1)
8	01053107AA	Lower shaft cover (x1)
9	01053110AA	Cover of spindle drive box (x1)
10	80031706	Coupling-lower shaft (x1)
11	80032002XN	Optical axis -20 (x1)
12	80032006	Coupling-upper shaft (x1)
13	01053108AA	Tension pulley (x1)
14	01053111AA	Tension axle (x1)
15	01053106AA	Lower shaft (x1)

Upper and Lower Shaft Drive Box Parts

	Part Number	Description
16	01400660	Bearing assembly of trimming box -SY (x1)
17	01400605	Bracket of trimming bearing -SY (x1)
18	80031703	Bearing -6003RS-inner bore φ17 (x1)
19	80031702	Optical axis -φ17 (x1)

Needle Bar Case

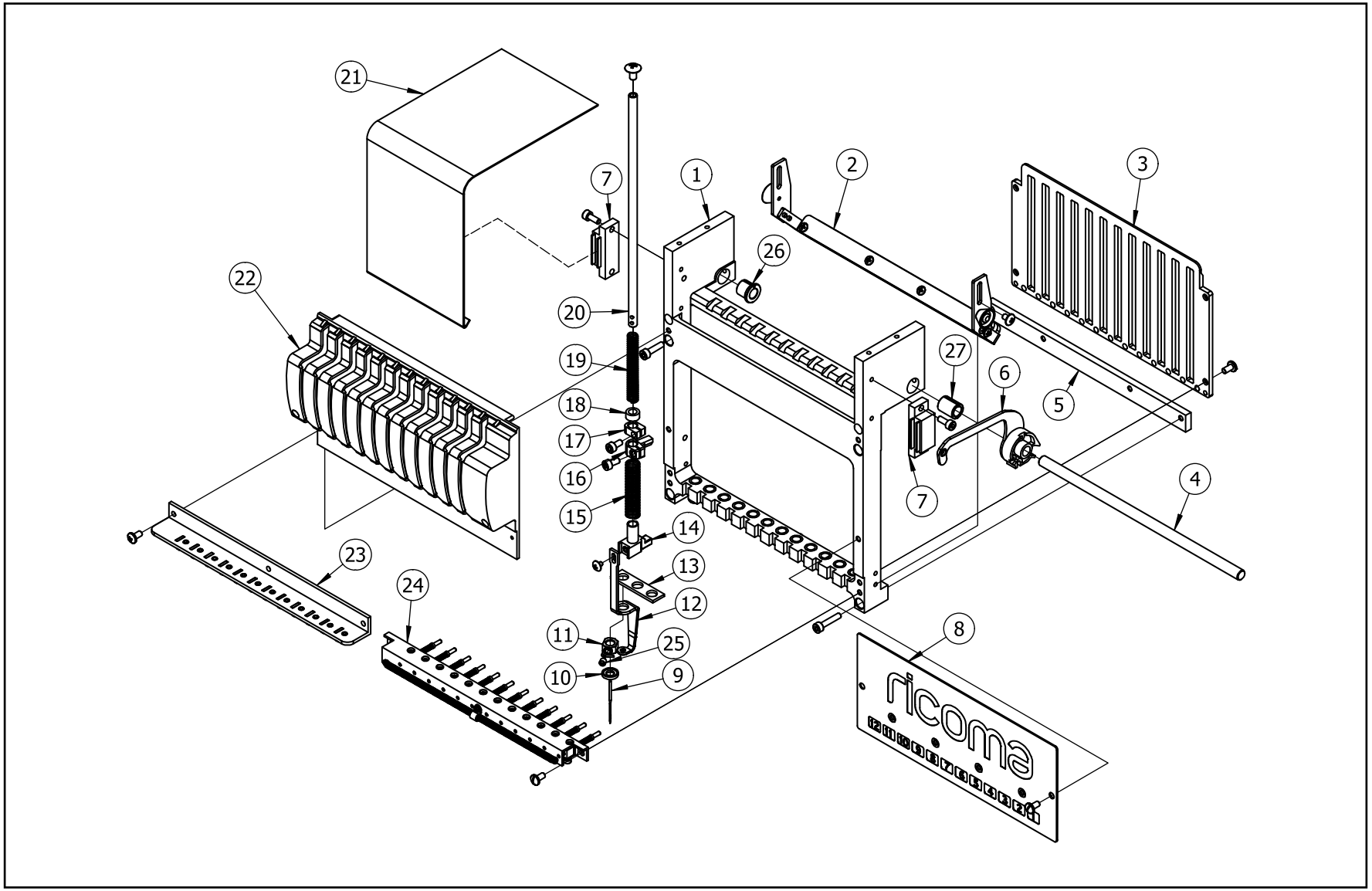

Needle Bar Case Parts

	Part Number	Description
1	400601******	Needle bar frame (x1)
2	030861**	Needle thread clamp assembly-high speed-number of needles (x1)
3	72014109-**	Needle bar guide plate-number of needles (x1)
4	0122153*	Axis of take-up-lever-number of needles (x1)
5	0121311*	Lower guide rail-high speed (x1)
6	4106100001	Take-up-lever kit (x1)
7	4106100017	Magnetic base-shaft housing (x2)
8	4006310***	Plug board of needle bar frame (x1)
9	8062****	Needle (x1)
10	01222110	Shock-absorbing pad (x1)
11	01222194	Needle chuck (x1)
12	03080165-1	High-speed machine presser foot sleeve (x1)
13	01221606	3-hole felt pad -1 (x1)
14	03080165-2	Lifting pressing sleeve (x1)
15	4106100021AA	Presser foot spring -0.9-compression (x1)

Needle Bar Case Parts

	Part Number	Description
16	01222106	Needle bar connecting pin (x1)
17	01222105	Top dead point clamp (x1)
18	4006200000	Rubber gasket of foot presser -4 (x1)
19	4106100020AA	Spring-needle bar reset -0.55 (x1)
20	4106100002	Needle bar-solid -L=217 (x1)
21	400631****	Plug board of needle bar frame (x1)
22	720112**-RH	Needle number upper panel-custom dark gray (x1)
23	722111**	Take-up cover and T-shaped thread-number of needles (x1)
24	4106040001**	Needle thread clamp assembly-number of needles (x1)
25	01222183AA	Needle clamp screw-hexagon socket (x1)
26	4106100003	Opening shaft sleeve -take-up-lever shaft -12.5 (x1)
27	4106100004	Opening shaft sleeve -take-up-lever shaft -14.5 (x1)

Machine Head

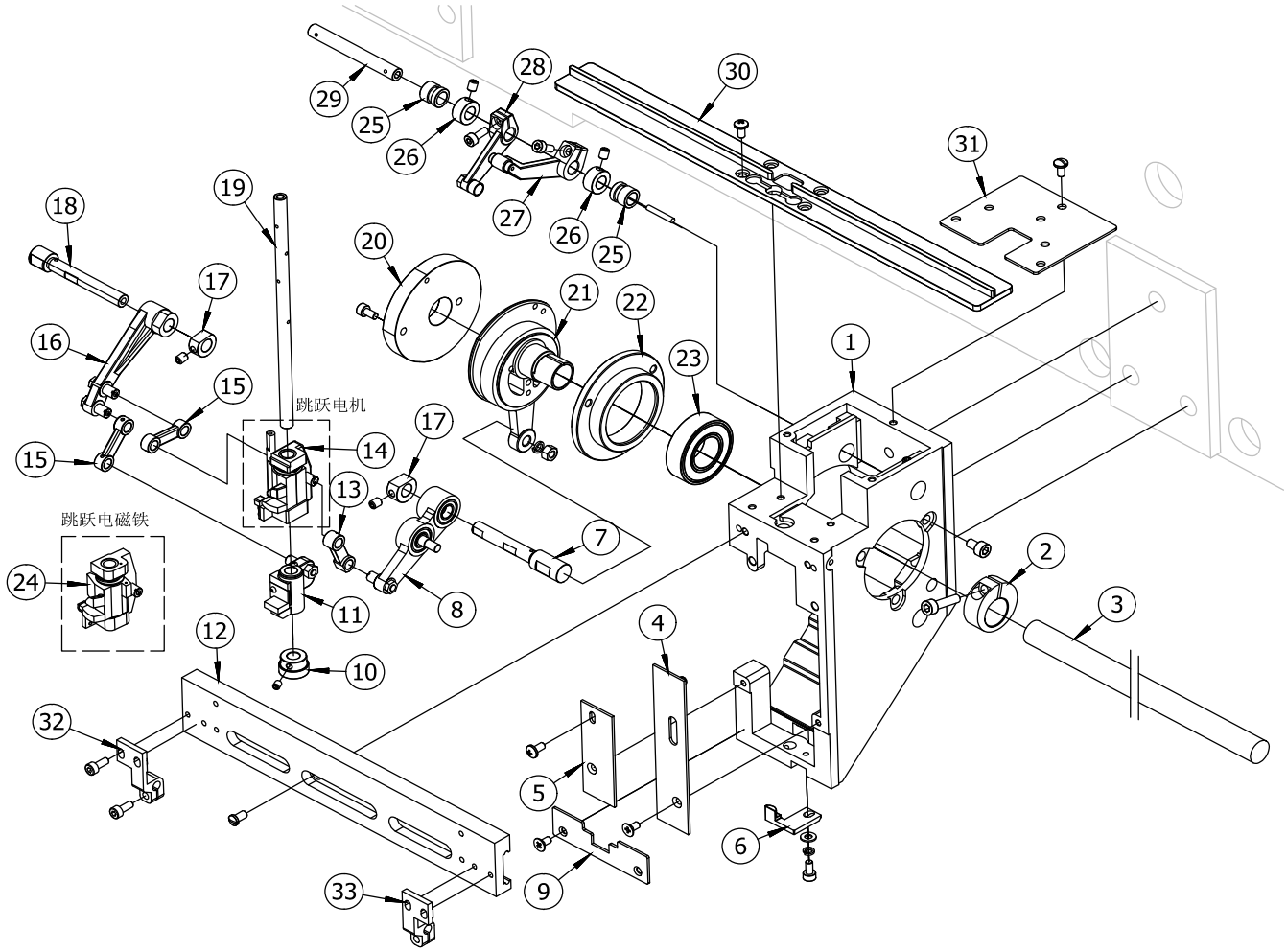

Machine Head Parts

	Part Number	Description
1	01210101AA	High Speed Head Box -45 (x1)
2	01212401AA	Clamping ring-Cam set -20 (x1)
3	80032002-****	Shaft -20 (x1)
4	01211007AA	Right catch of machine head (x1)
5	01211008AA	Left catch of machine head (x1)
6	01210122	Rotary Position Hook -lower guide rail-high speed -YJ (x1)
7	01212304.	Three-eye connecting rod pin-single convex (x1)
8	01212161AA	Three-eye connecting rod assembly-high speed (x1)
9	01211011AA	Front lower cover plate (x1)
10	80037921	Bearing -7.24-17-4 (x1)
11	01212260AA	Presser foot drive block (x1)
12	4106110004-*	Bead rack guide-number of needles (x1)
13	01212109AA	Small connecting rod-high-High Speed Head -21 (x1)
14	01212062AA	Needle Bar Reciprocator-jumping motor -22 model (x1)
15	01212110AA	Lengthened small connecting rod-single convex -24.5 (x2)
16	01212162AA	Presser foot drive connecting rod assembly (x1)
17	01202204AA	One-eye retainer ring-milling notch (x2)

Machine Head Parts

	Part Number	Description
18	01212121AA	Presser foot drive pin (x1)
19	01212306	Head Driving Shaft- High Speed Head -7.24 (x1)
20	01212405AA	Take-up cam -20 shaft -22 hole (x1)
21	01212461AA	Large Connecting Rod -single convex dual drive -20 shaft (x1)
22	4004530600AA	Bearing base -6005RS-20 (x1)
23	80032022	Deep groove ball bearing -6004ZZ (x1)
24	01212072AA	Needle bar driver-high speed-Solenoid (x1)
25	01210103AA	AB steel sleeve (x2)
26	01202204	Baffle (x2)
27	01212165AA	Take-up connecting rod assembly B (x1)
28	01212163AA	Take-up connecting rod assembly B (x1)
29	01212307AA	Take-up connecting rod shaft -φ8X65 (x1)
30	400522****	Aluminum guide rail of take-up-lever -12 needles (x1)
31	4005230000	Head c plate (x1)
32	01213131LB	Color changing chuck (left) (x1)
33	01213130LB	Color changing chuck (right) (x1)

Jumping Motor

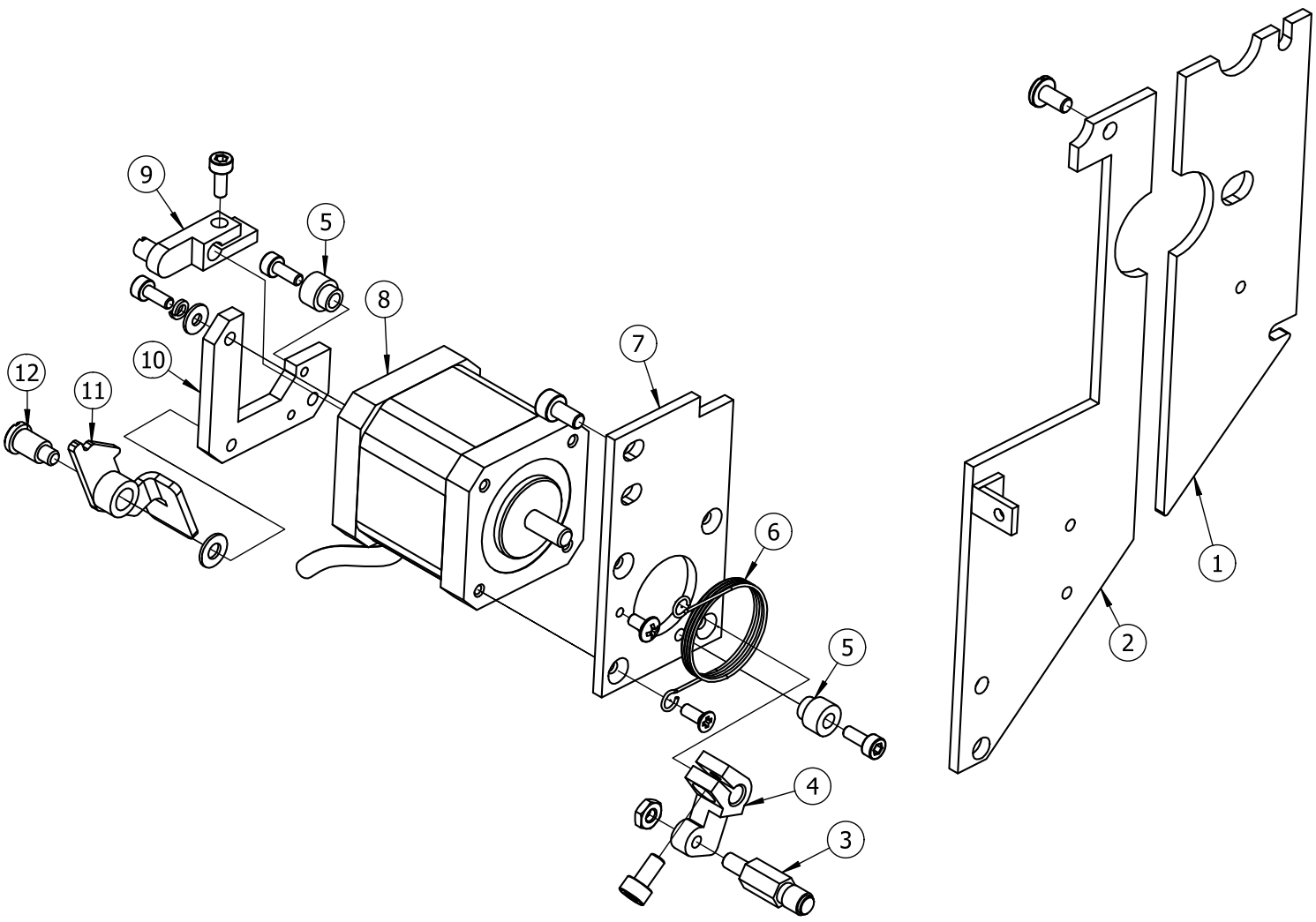

Jumping Motor Parts

	Part Number	Description
1	01211009	Board A (x1)
2	4005320200VA	High-speed head board B -motor (x1)
3	4005330204VA	Jumping chapiter -6 (x1)
4	4005330***-1	Swing arm of jumping motor (x1)
5	4005330***-2	Limit rubber gasket (x2)
6	4005330***-3	Reset spring of jumping chapiter (x1)
7	4005330202VA	Mounting plate of jumping motor (x1)
8	80304216	Jumping motor -42D48C1206E (x1)
9	4005330***-4	Manual locking swing rod (x1)
10	4005330***-5	Locking wrench bottom plate (x1)
11	4005330***-6	Locking wrench (x1)
12	4005330***-7	Wrench pin (x1)

Jumping Solenoid

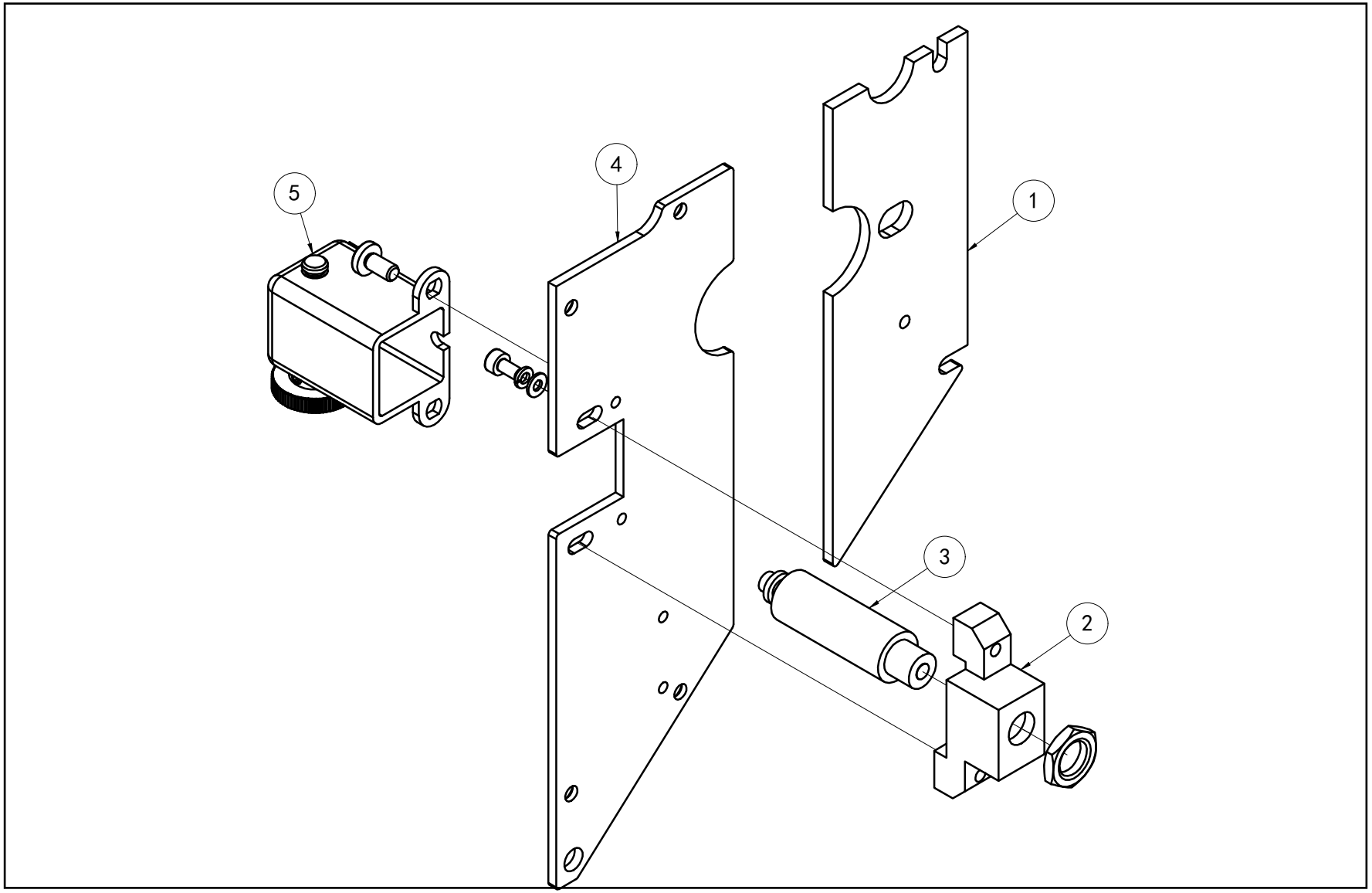

Jumping Solenoid Parts

	Part Number	Description
1	01211009	Board A (x1)
2	01212502	Jumping Solenoid base (x1)
3	80320201	Jumping Solenoid (x1)
4	01211010	High-speed head board B - Solenoid (x1)
5	01202592	Jumping motor housing (x1)

Rotary Hook Box

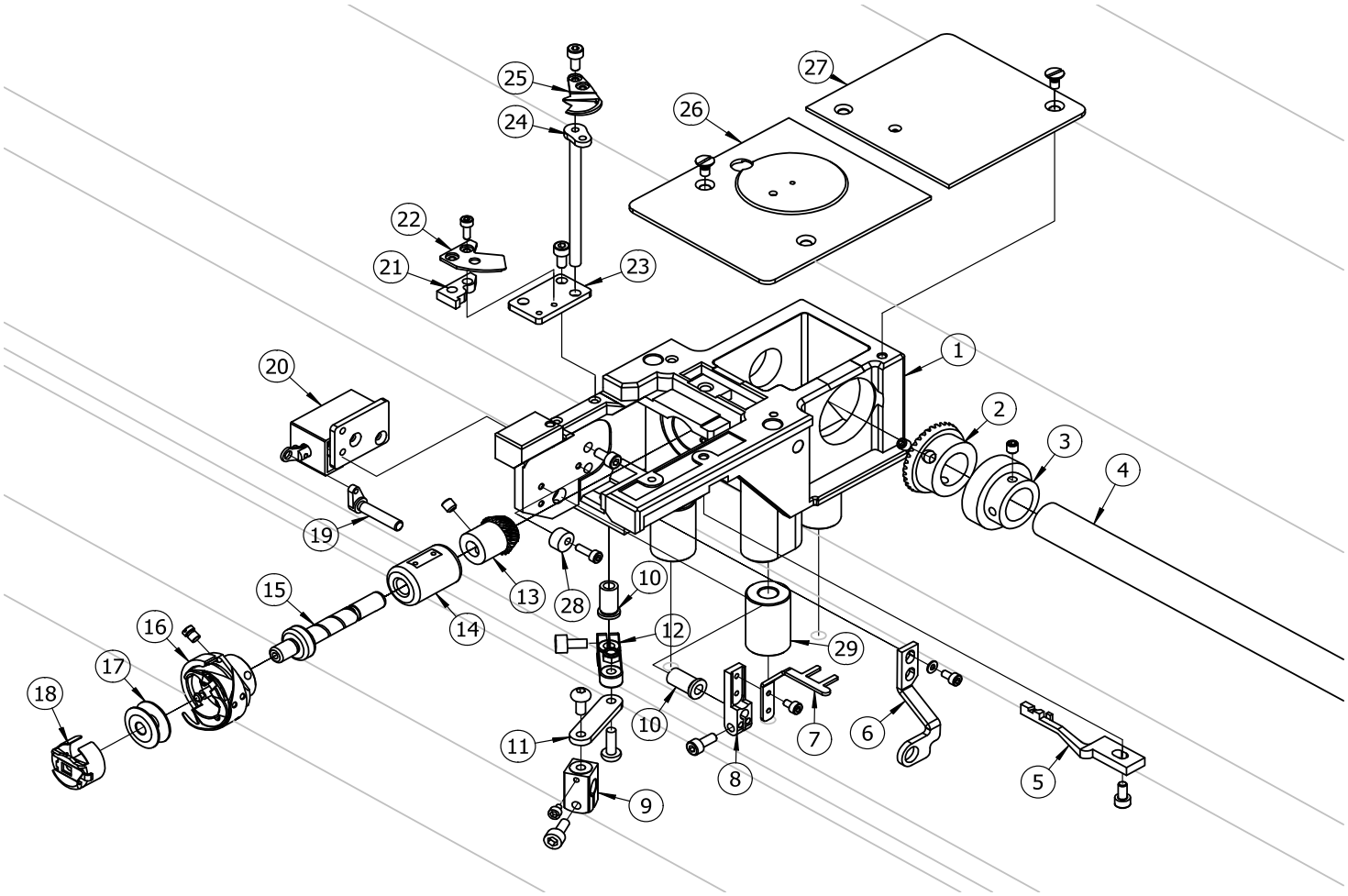

Rotary Hook Box Parts

	Part Number	Description
1	4104010001	Big cutter trimming of shuttle box (x1)
2	01030172-1	Umbrella-shaped gear-big -17 (x1)
3	80031703	Bearing -6003RS-17 (x1)
4	80031702XN	Shaft -17 (x1)
5	4104010003	Position hook-big cutter trimming (x1)
6	4104010011	Bracket-trimming shaft (x1)
7	4104010007-1	Picker (x1)
8	4104010007-2	Picker mounting base (x1)
9	4104010008-1	Bracket-line fork solenoid valve 1 (x1)
10	4104010014	Shaft sleeve-oil-containing (x2)
11	4104010008-2	Bracket-line fork solenoid valve 2 (x1)
12	4104010008-3	Bracket-line fork solenoid valve 3 (x1)
13	01030172-2	Umbrella-shaped gear-small -7.9 (x1)
14	01030160-1	Rotating shuttle shaft + sleeve-retainer ring (x1)
15	01030160-2	Rotating shuttle shaft + sleeve- rotating shuttle shaft (x1)

Rotary Hook Box Parts

	Part Number	Description
16	80620272	Rotary Hook- -MG1F (x1)
17	80620302	Bobbin (x1)
18	80620301	Bobbin Case (x1)
19	4104010013	Shaft-picker (x1)
20	80320203	Picker Solenoid- -DC45V (x1)
21	4104010018	Cushion block-big cutter trimming and cutter fixing (x1)
22	4104010017	Scissors-big cutter trimming and cutter fixing (x1)
23	4104010012	Base-fixed cutter (x1)
24	4104010010	Cutter shaft-movable (x1)
25	4104010005	Scissors-big cutter trimming moving cutter (x1)
26	4104010016-1	Needle plate-big cutter trimming front section (x1)
27	4104010016-2	Needle plate-big cutter trimming back section (x1)
28	4104010015	Silencer ring-thread hooking (x1)
29	4104010004	Gasket-rotating shuttle box (x3)

Color Changing Box (6 and 9 Needles)

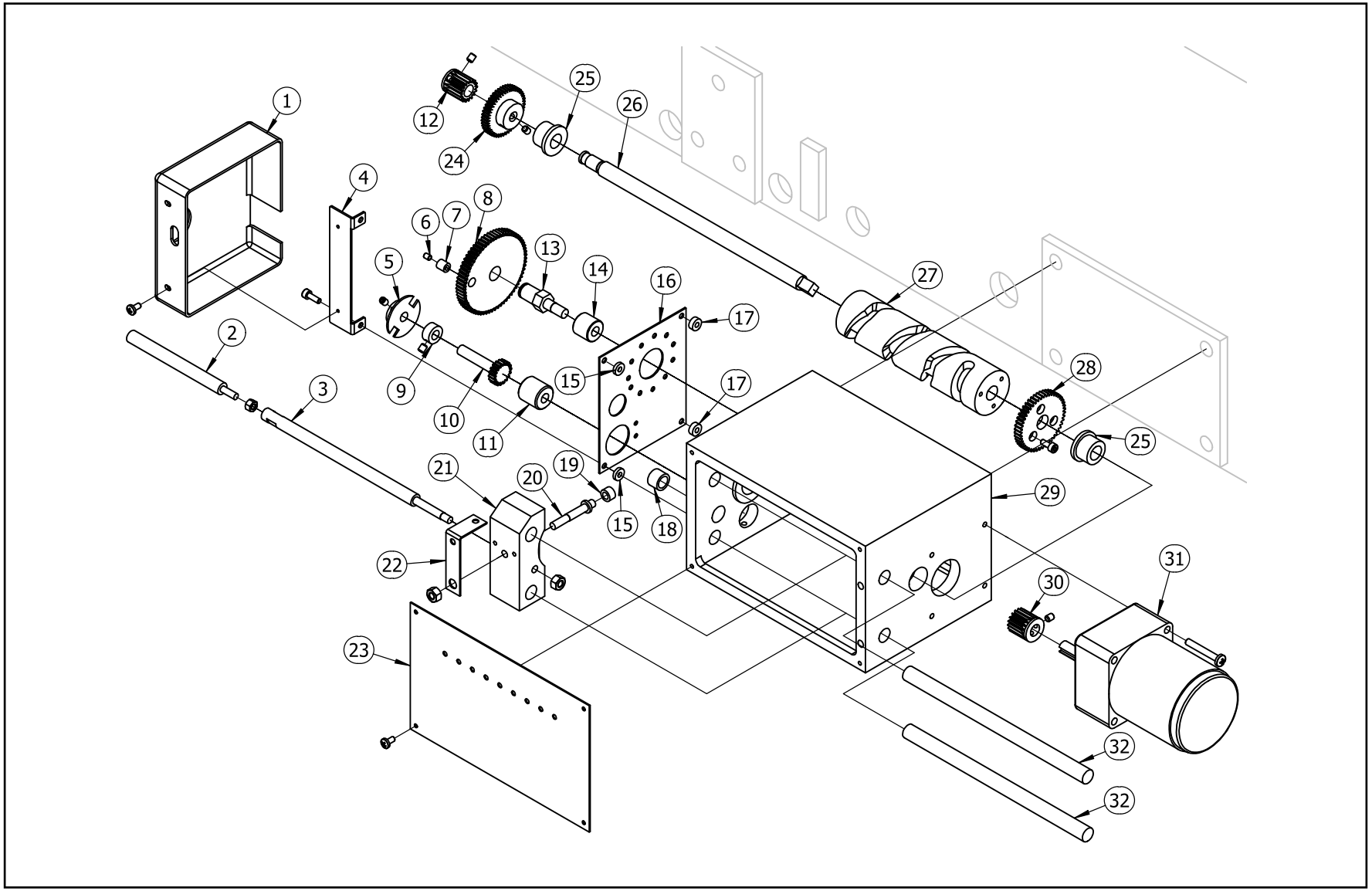

Color Changing Box (6 and 9 Needles) Parts

	Part Number	Description
1	01291292-*-1	Plastic housing of color changing box (x2)
2	80030615	Color changing pull rod (x1)
3	01291292-*-2	Color changing shaft (x1)
4	01291292-*-3	Bracket of color changing box (x1)
5	01291292-*-4	Semi-rotating light blocker (x1)
6	01291292-*-5	Color changing magnet (x1)
7	01291292-*-6	Color changing magnet sleeve (x1)
8	01291292-*-7	Needle position gear (x1)
9	01291292-*-8	Semi-rotating gasket (x1)
10	01291292-*-9	Semi-rotating shaft (x1)
11	01291292-*-10	Semi-rotating shaft sleeve (x1)
12	01291292-*-11	Spindle drive pinion (x2)
13	01291292-*-12	Needle position shaft (x1)
14	01291292-*-13	Needle position shaft sleeve (x1)
15	01291292-*-14	Needle position plate gasket (x2)
16	01291292-*-15	Needle position plate (x1)
17	01291292-*-16	Gasket thickness of needle position plate (x2)

Color Changing Box (6 and 9 Needles) Parts

	Part Number	Description
18	01291292-*-17	Change pull rod sleeve (x1)
19	01291292-*-18	Cam roller (x1)
20	01291292-*-20	Cam pin (x1)
21	01291292-*-21	Sliding guide base (x1)
22	01291292-*-22	Color changing indication frame (x1)
23	01291270-*-PY	Color changing box panel-number of needles (x1)
24	01291292-*-23	Needle position drive gear (x1)
25	01291292-*-24	Camshaft sleeve (x2)
26	01291292-*-25	Camshaft (x1)
27	01291292-*-26	Color changing cam (x1)
28	01291292-*-27	Cylindrical gear 2 (x1)
29	01291292-*-28	Color changing box (x1)
30	01291292-*-29	Motor drive pinion -18 gears (x1)
31	8032010*	Gear motor -YN70-**W-G10 (x1)
32	01291292-*-29	Guide bar (x2)

Color Changing Box (12 and 15 Needles)

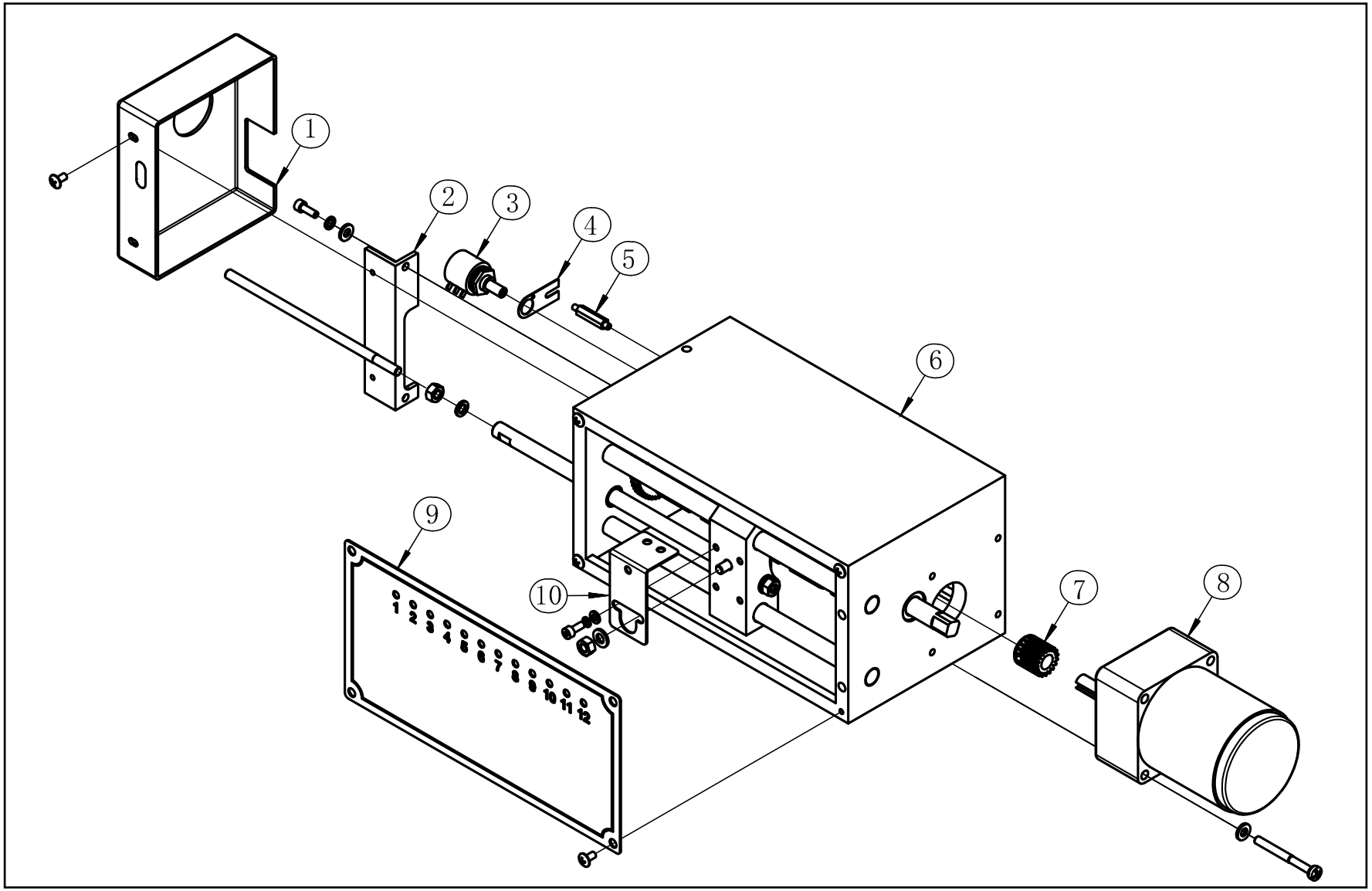

Color Changing Box (12 and 15 Needles) Parts

	Part Number	Description
1	80211002	Cover of color changing box (x1)
2	01291208	Housing bracket of color changing box (x1)
3	80333702VA	Potentiometer 7276 (x1)
4	03040510	Potentiometer support plate (x1)
5	03040509	Potentiometer fixing bolt (x1)
6	012912**	Color changing box assembly (x1)
7	01290902	Drive pinion -18 gears (x1)
8	80320101	Gear motor -YN70-15W-G10 (x1)
9	012912**	Panel of color changing box (x1)
10	01290912	Color changing indication frame (x1)

Screw Loop Color Changing Box

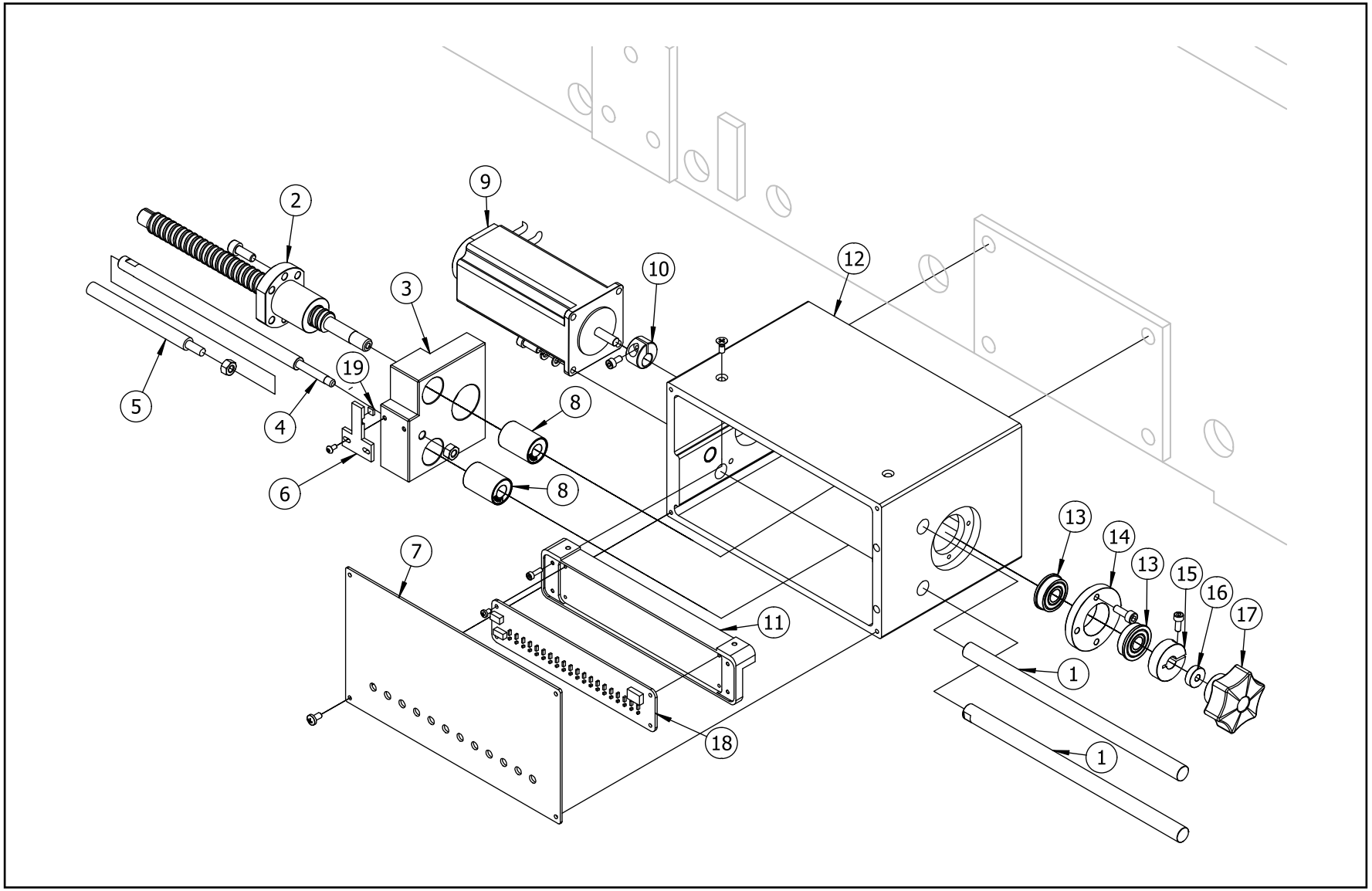

Screw Loop Color Changing Box Parts

	Part Number	Description
1	40070302****-1	Color changing guide shaft (x2)
2	40070302****-2	Screw loop (x1)
3	40070302****-3	Color changing shaft base (x1)
4	40070302****-4	Color changing shaft (x1)
5	80030615	Color changing connecting rod (x1)
6	40070302****-5	Needle position sensing piece (x1)
7	40070302**-PY	Stepping screw loop and panel of color changing box -number of needles (x1)
8	40070302****-6	LM12UU linear bearing -10-21 (x2)
9	2075050003	Screw loop and color changing stepping closed-loop motor (x1)
10	40070302****-7	Tightening ring of stepping color changing motor shaft (x1)
11	40070302****-8	Needle position detection plate base (x1)
12	40070302****-9	Screw loop and color changing box (x1)
13	40070302****-10	Bearing -F6000Z-10-26 (x2)
14	40070302****-11	F6000Z bearing base (x1)
15	40070302****-12	Screw loop and clearance adjusting ring (x1)

Screw Loop Color Changing Box Parts

	Part Number	Description
16	40070302****-13	Bolt pad (x1)
17	40070302****-14	Knob (x1)
18	40070302****-15	Needle position plate (x1)
19	40070302****-16	Magnet (x1)

Trimming Box

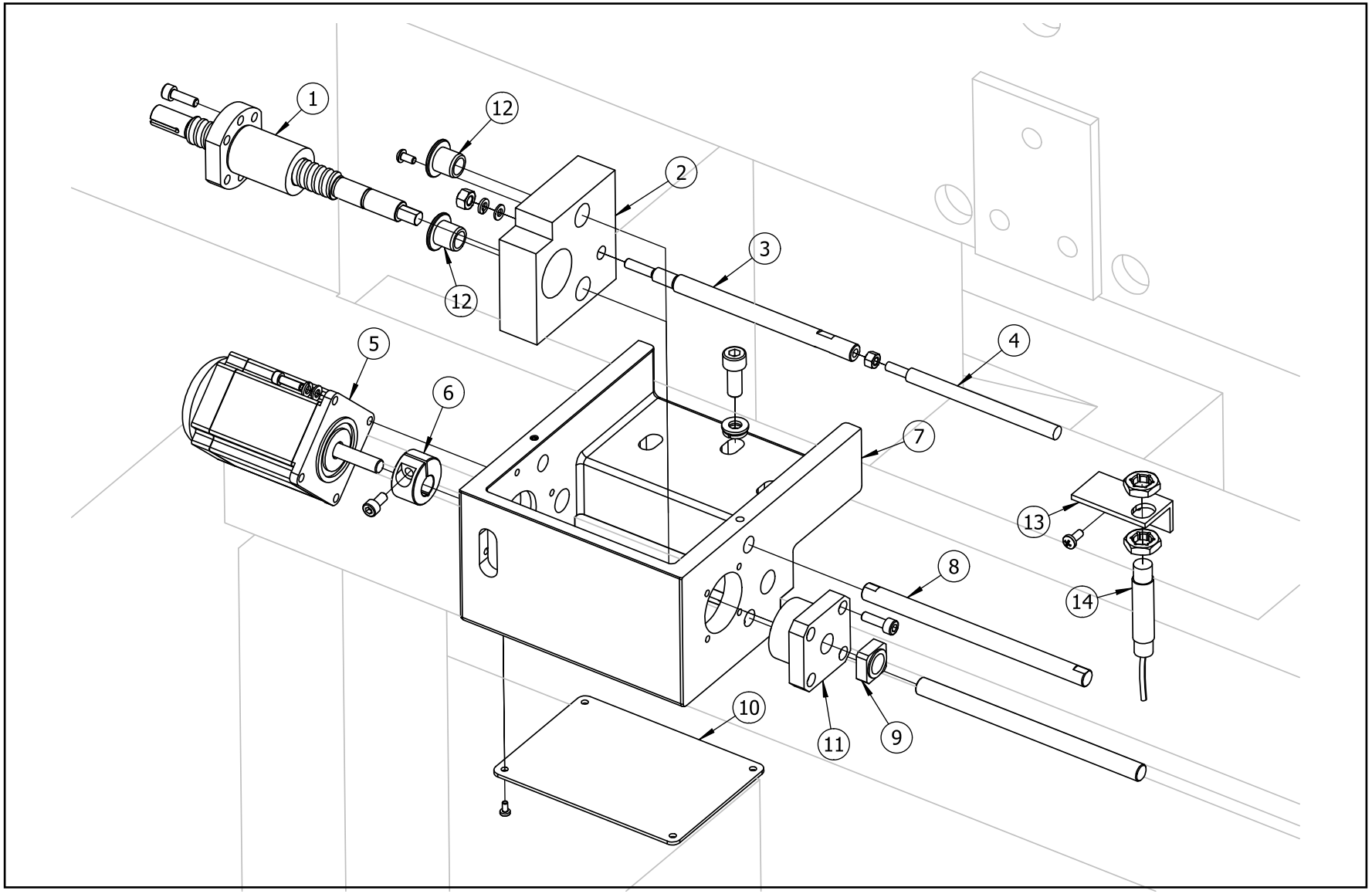

Trimming Box Parts

	Part Number	Description
1	01401602	Ball screw loop kit -FC-1605 (x1)
2	01401604	Screw loop slider base -1605 (x1)
3	01401603	Trimming pull rod-screw loop trimming (x1)
4	80030801	Connecting rod shaft -8 (x1)
5	803057**	Motor -F57-H112 (x1)
6	4108010005	Tightening ring-motor -D12 (x1)
7	01401601	Trimming box (x1)
8	01401605	Guide shaft-screw loop trimming (x2)
9	80901221	Lock nut -M12- support base of ball screw loop (x1)
10	01401606-PY	Cover of screw loop trimming box (x1)
11	80031231	Support base of ball screw loop -FK12 (x1)
12	80031041	Graphite copper sleeve -10X14X15-t22X2 (x2)
13	01400105	Bracket-trimming proximity switch -MT (x1)
14	80333602	Proximity switch (x1)

Hooking

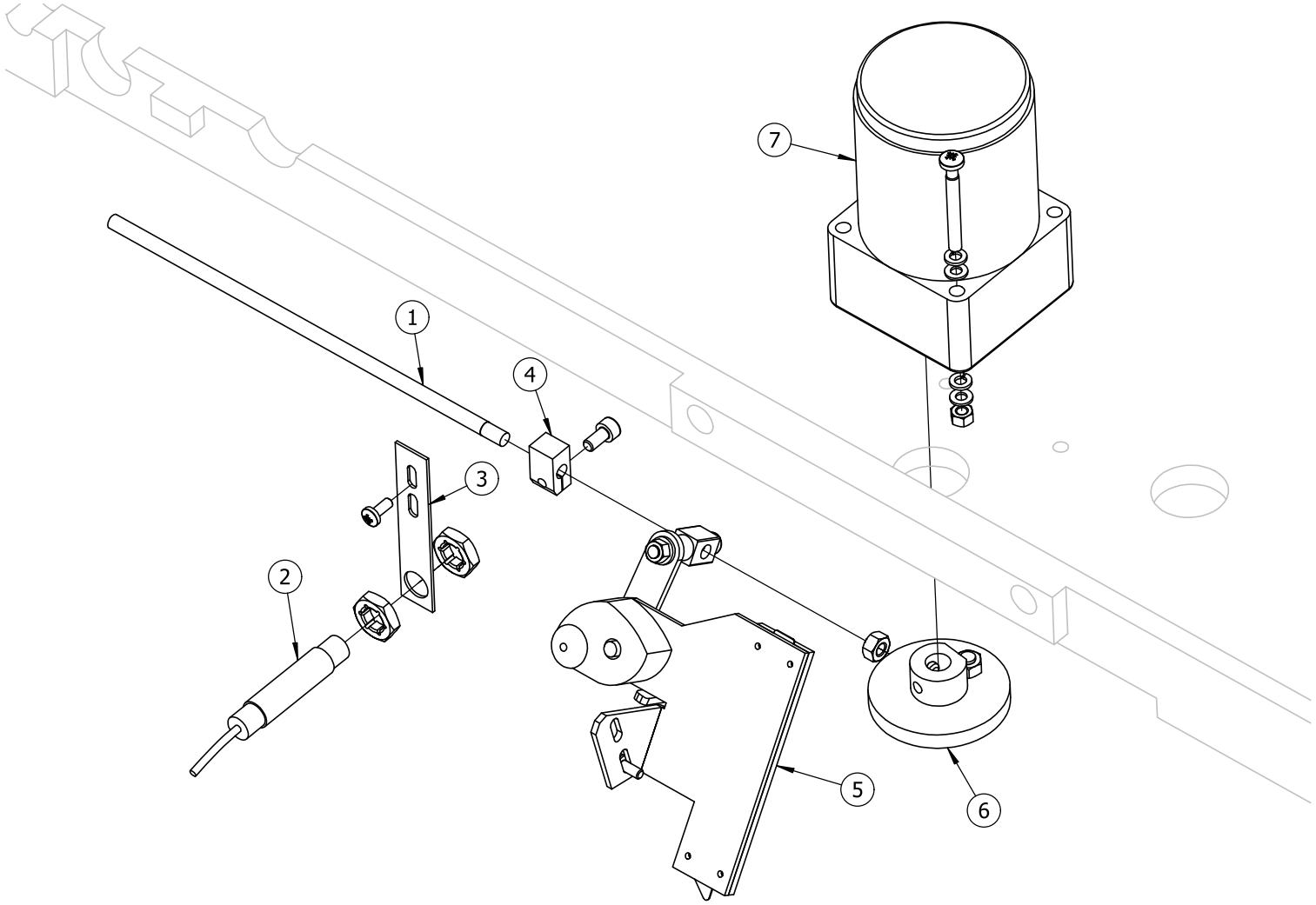

Hooking Parts

	Part Number	Description
1	80030801	Pull rod shaft (x1)
2	80333602	Proximity switch (x1)
3	01430507	Hooking proximity switch bracket (x1)
4	80030806	Coupling sleeve -φ8 (x1)
5	01430382AA	High-speed lock hooking device (x1)
6	01431162	Hooking drive eccentric wheel (x1)
7	80320111	Color changing motor -YN70-15W-G12.5 (x1)

XY Servo Drive Box #1

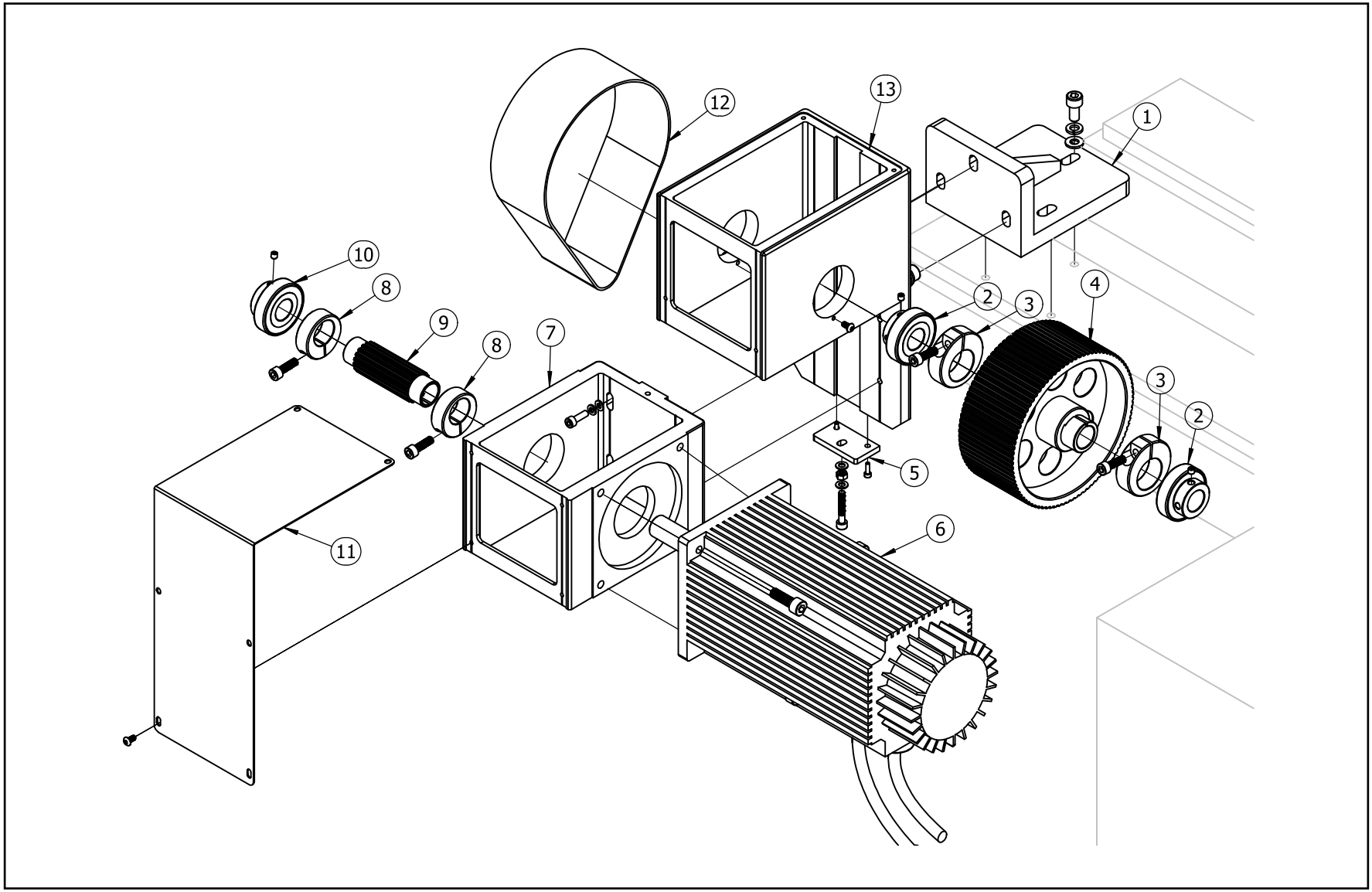

XY Servo Drive Box #1 Parts

	Part Number	Description
1	4110120001AA-PY	Mounting base-gearbox (x1)
2	80032004	Bearing -6005RS- φ20 (x2)
3	4110120005	Clamping ring-belt pulley -D28 (x2)
4	4110120004	Belt pulley- gearbox -B-100 gear (x1)
5	4110120007	Adjusting block-tension -50*28*t5 (x1)
6	802340****	Servo motor-sm110- SM110-*****-D** (x1)
7	4110120010	Gearbox -B (x1)
8	4110120003	Clamping ring-belt pulley -D23 (x2)
9	4110120002	Belt pulley-motor -A- split (x1)
10	80031904	Bearing -6005RS-19-47 (x2)
11	4110120008AA	Box cover (x1)
12	4110120006AA	Synchronous belt -W60-S5M545 (x1)
13	4110120009AA	Gearbox -A (x1)

XY Servo Drive Box #2

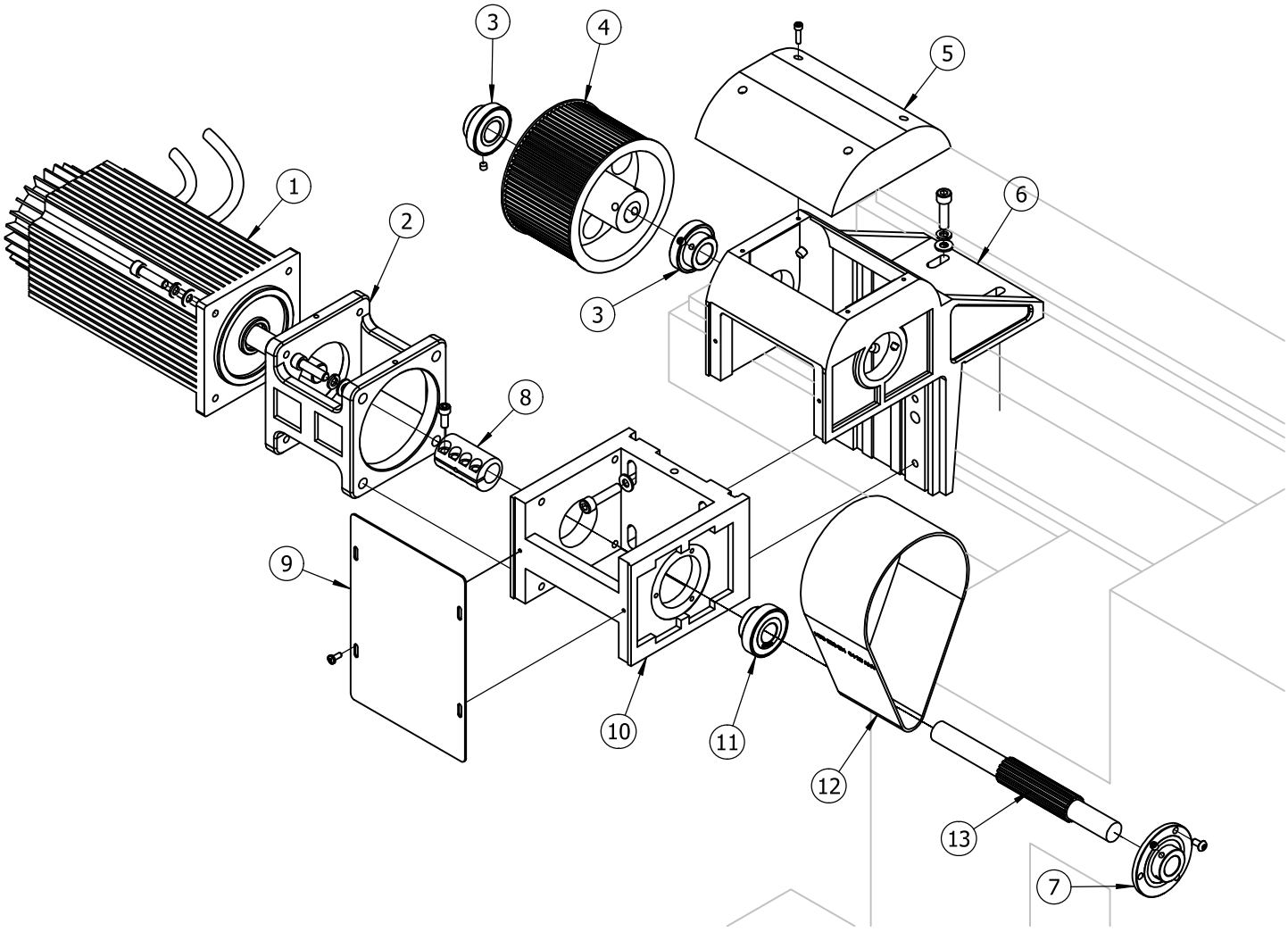

XY Servo Drive Box #1 Parts

	Part Number	Description
1	802340****	Main servo motor (x1)
2	4017010002-1	Motor mounting base (x1)
3	4017010002-2	Bearing -60-20RS-20-47 (x2)
4	4017010002-3	Big gear -80 gears (x1)
5	4017010002-4	Upper cover of servo drive box (x1)
6	4017010002-5	Case mounting base (x1)
7	4017010002-6	Bearing -60-20RS-19-51 (x1)
8	4017010002-7	Coupling sleeve (x1)
9	4017010002-8	Cover plate (x1)
10	4017010002-9	Gearbox -B (x2)
11	4017010002-10	Bearing -60-20RS-19-47 (x1)
12	4017010002-11	Belt-HTD 520-5M 04 23 AAA (x1)
13	4017010002-12	Pinion -16 drive ratio 1:5 (x1)
	4017010001-1	Pinion -20 drive ratio 1:4 (x1)

XY-Axis Drive Base

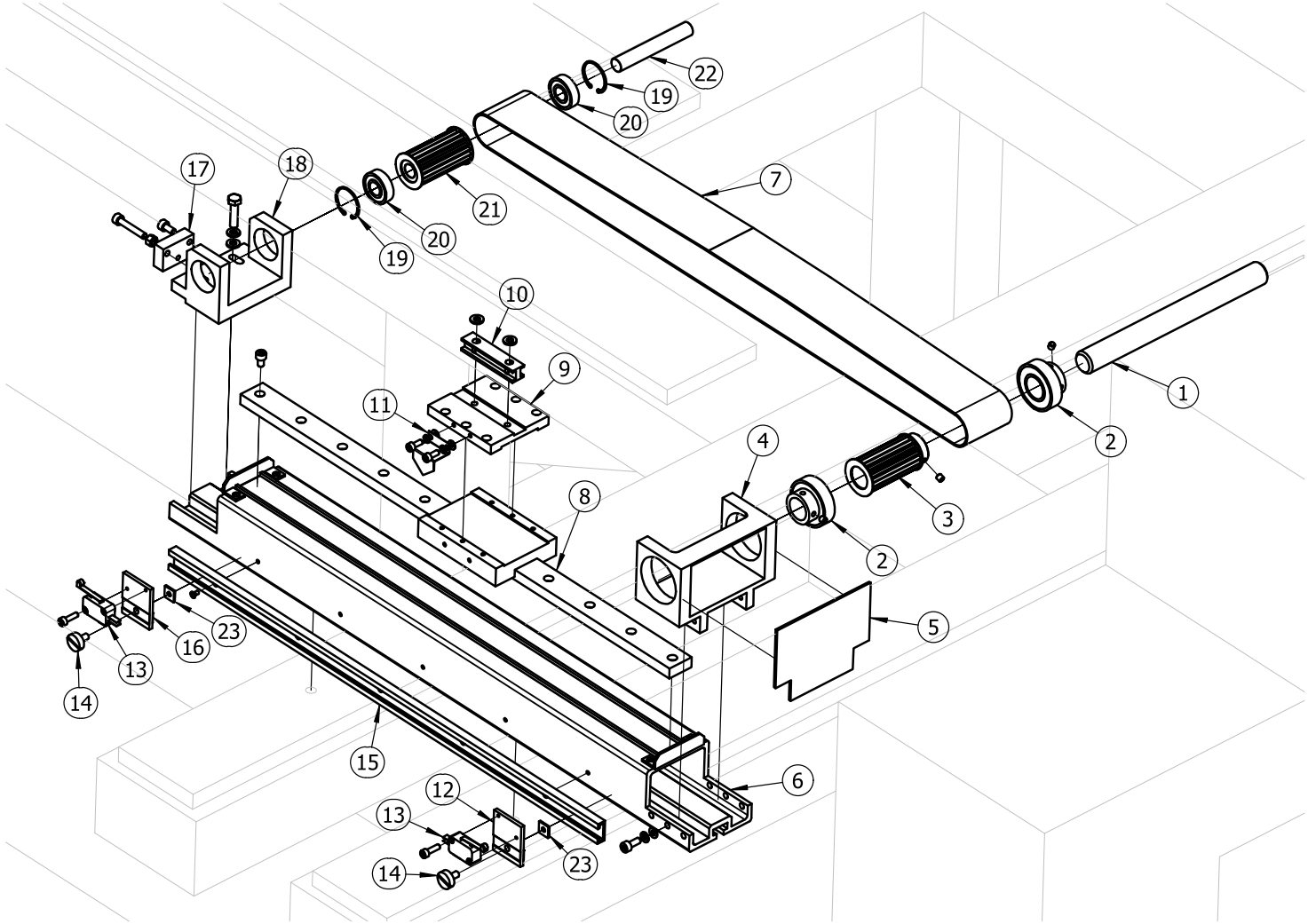

XY-Axis Drive Base Parts

	Part Number	Description
1	401001040000	Shaft-20 (x1)
2	40100104****-1	Bearing -6004RS-20-42 (x2)
3	4010010008	Drive wheel of drive base -HTD5M-W50 (x1)
4	40100104****-2	Rear bearing base (x1)
5	40100104****-3	Plastic protective cover (x1)
6	40100104****-4	Guide rail base (x1)
7	4110100020AA	Open synchronous belt-embroidery frame -W50-S5M (x1)
	4110100021AA	Open synchronous belt-embroidery frame -W40-S5M (x1)
8	40100104****-5	Guide rail assembly (x1)
9	4010100000AA	Belt pressing plate X direction -W50 (x1)
10	4012040000AA	I-shaped pad (x1)
11	4011060007	Limit block (x12)
12	4110100031	Mounting base-limit switch -t4 (x1)
13	80351101	Microswitch (x2)
14	4110100033	Manual screw -limit adjustment -M4 (x1)

XY-Axis Drive Base Parts

	Part Number	Description
15	40100104****-6	Guide rail base side strip (x1)
16	4110100031	Mounting base-limit switch -t4 (x1)
17	40100104****-7	Adjusting block (x1)
18	40100104****-8	Bearing base A (x1)
19	40100104****-9	Jump ring (x2)
20	40100104****-10	Bearing -6001RS-12-28 (x2)
21	40100104****-11	main motor tension pulley -20 gear -12 (x1)
22	40100104****-12	Shaft-12 (x1)
23	4110100030	Nut-limit switch (square) (x2)

Y-Axis Auxiliary Drive Part

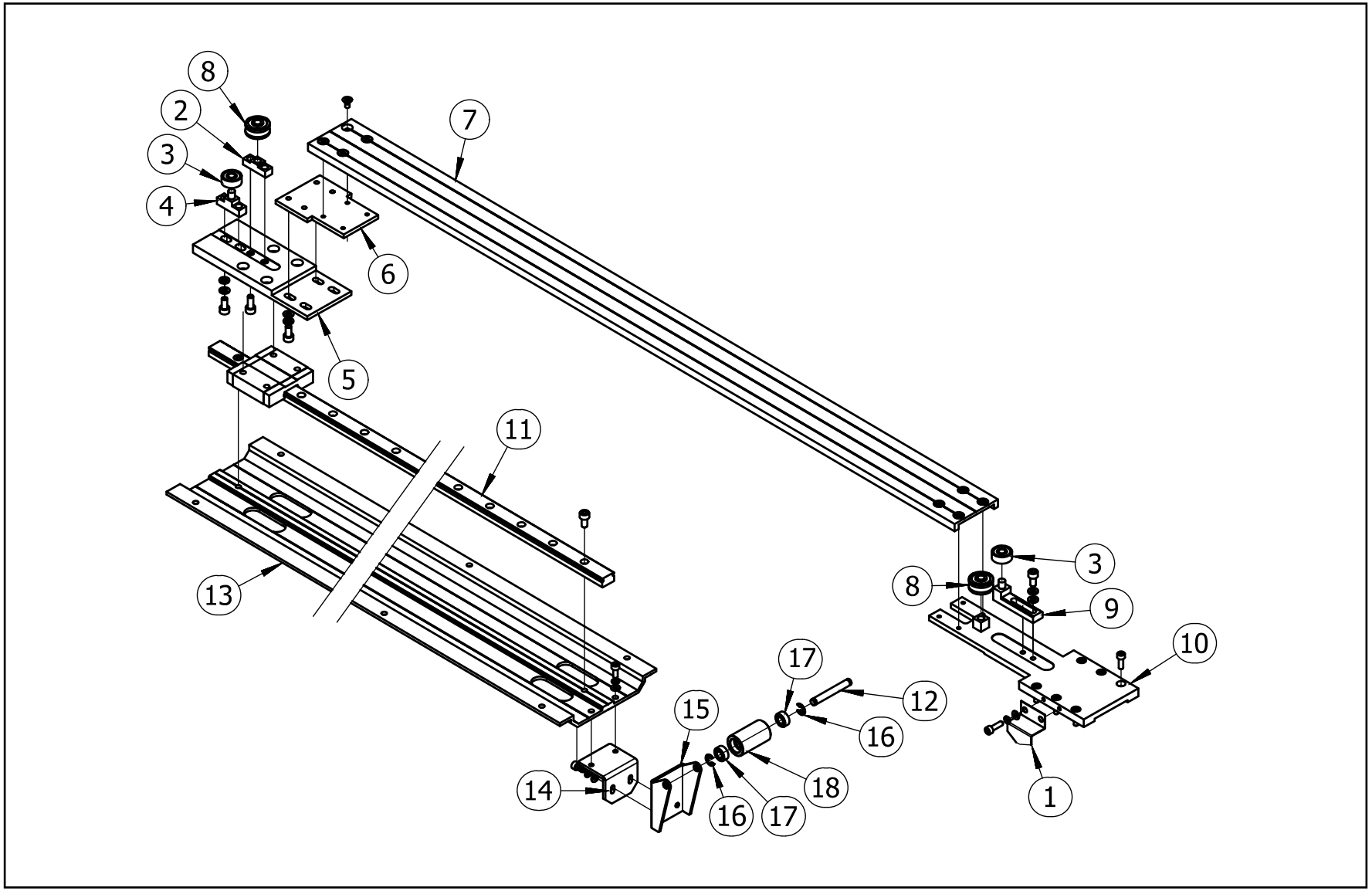

Y-Axis Auxiliary Drive Parts

	Part Number	Description
1	4011060007	Limit block (x1)
2	4011060004	Front guide rail adjusting block -M6 concave bearing (x1)
3	80030606	626 thickened bearing (x2)
4	4011060003	Front guide rail adjusting block -6 shafts-H7.5 (x1)
5	4011060005	Front guide rail trolley (x1)
6	4011060006	Adjusting block-belt pressing plate (x1)
7	401103****	Guide rail connecting plate (x1)
8	80030631	U-shaped double-row bearing -UD22-6-11 (x1)
9	4011060002	Rear guide rail adjusting block -6 shafts-H7.5 (x1)
10	4011060001AA	Belt pressing plate –Y-axis-W40 (x1)
11	411004****	Slide rail assembly (x1)
12	4110110006	Pin-connecting plate support roller-embroidery frame (x1)
13	411003****	Front guide rail base (x1)
14	4110110005	Bracket-embroidery frame connecting plate -A-t3 (x1)
15	4110110004	Bracket-embroidery frame connecting plate -B-t2 (x1)

Y-Axis Auxiliary Drive Parts

	Part Number	Description
16	4110110009	Jump ring -E -M5 (x2)
17	4110110008	Bearing -686ZZ (x2)
18	4110110007	Auxiliary wheel-connecting plate -D20 (x1)

Embroidery Frame

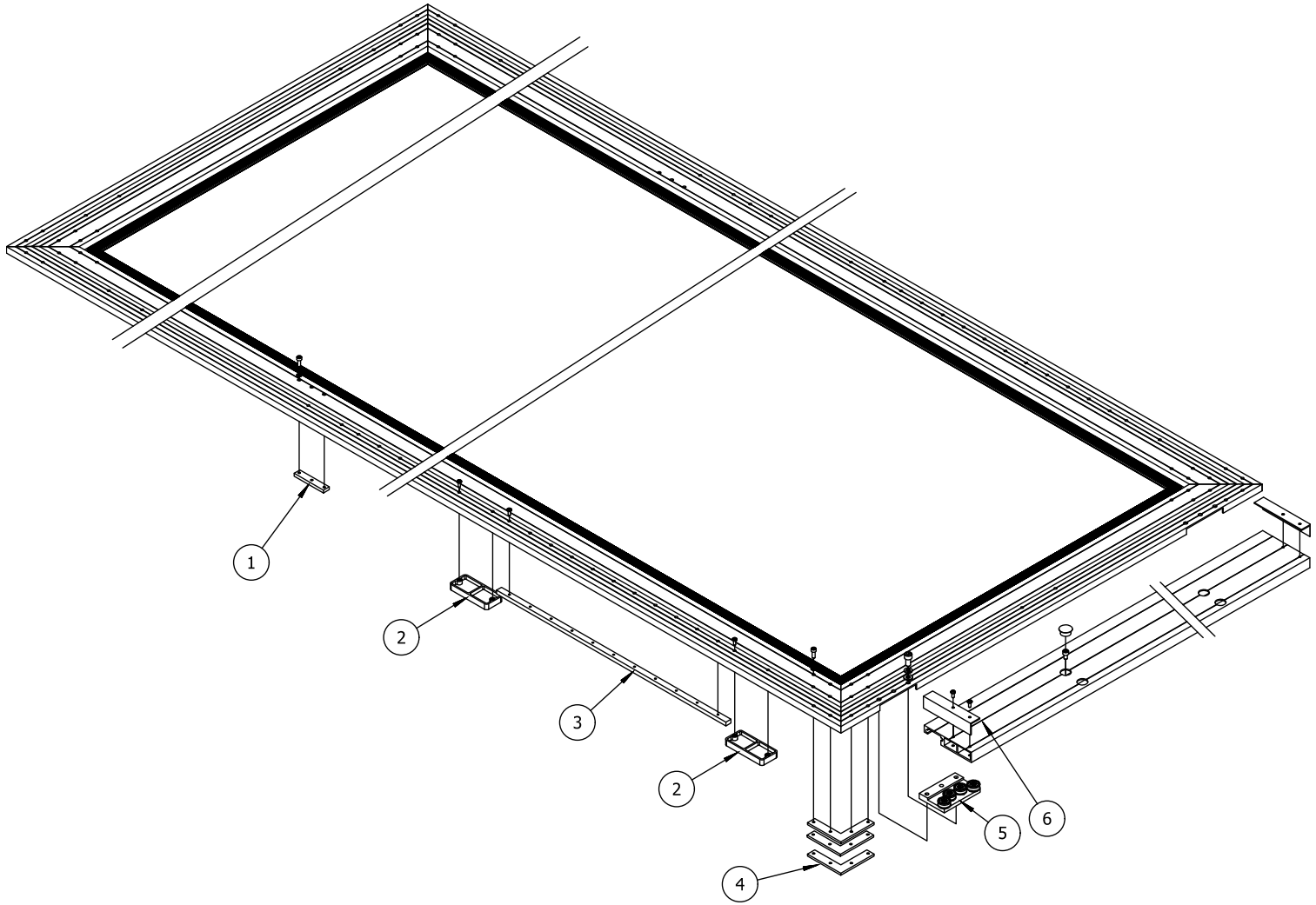

Embroidery Frame Parts

	Part Number	Description
1	4012320000	Fixing block of reinforcing strip (xN)
2	7112516*	Wool felt base (xN)
3	4012110350AA	Front and rear guide rails of frame (xN)
4	02513010	Right angle frame -GY-4PCS (x12)
5	41110100060AAXN	Reinforcing catch bearing base assembly (xN)
6	4012050000	Reinforcing catch (x2)

Frame Optional Parts

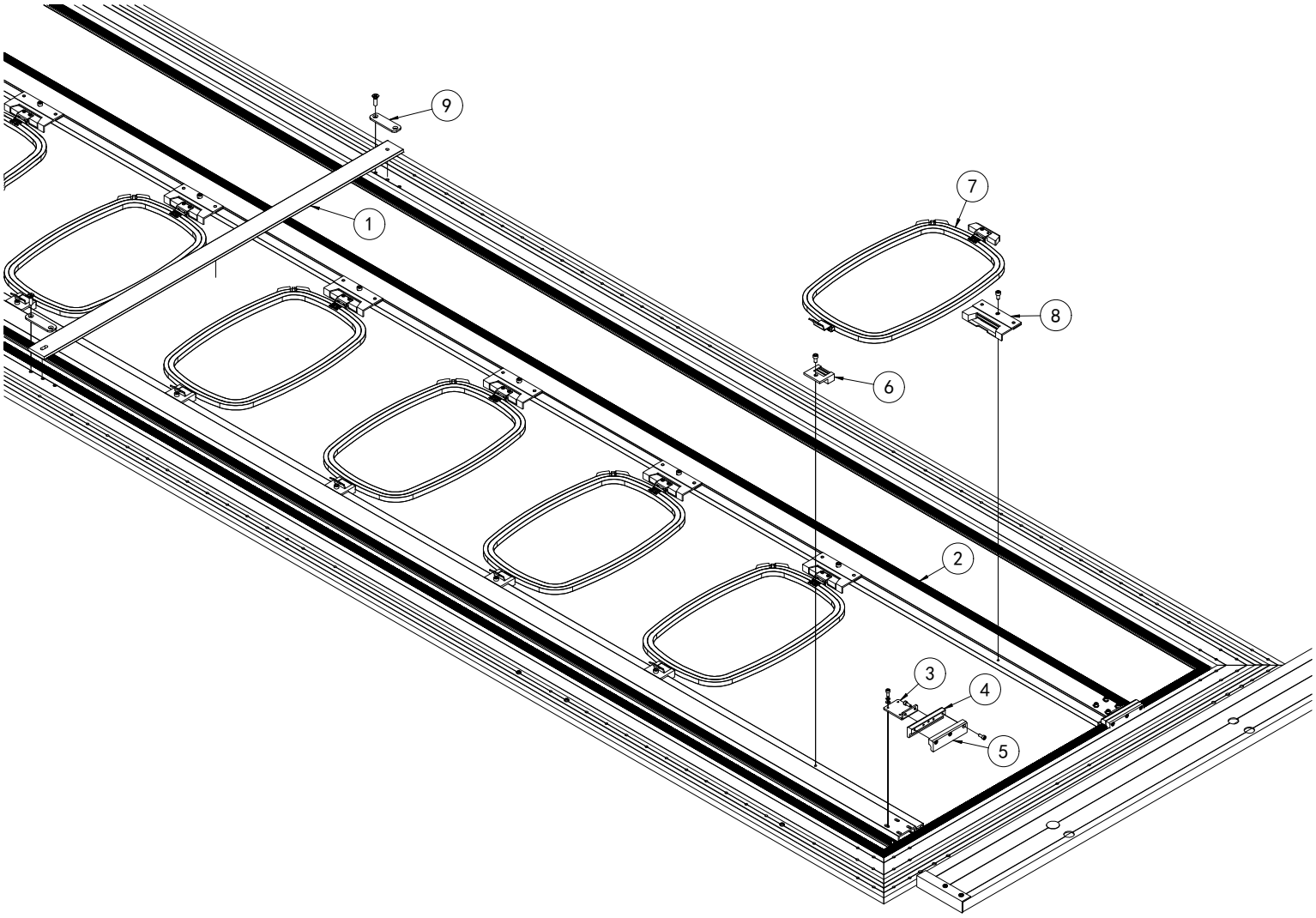

Frame Optional Parts

	Part Number	Description
1	401227****	Fixing strip of movable catch (xN)
2	401226****	Movable catch of embroidery frame (x2)
3	4012280100	Sub-frame connecting plate (x4)
4	4012280300	Chuck B (x4)
5	4012280200	Chuck A (x4)
6	01511501	Magnet box-small (xN)
7	300617****	Frame (xN)
8	01511502	Magnet box-big (xN)
9	4012060000	Mobile stopper (xN)

Wheel (Magnetic Braiding) Thread Tension Base

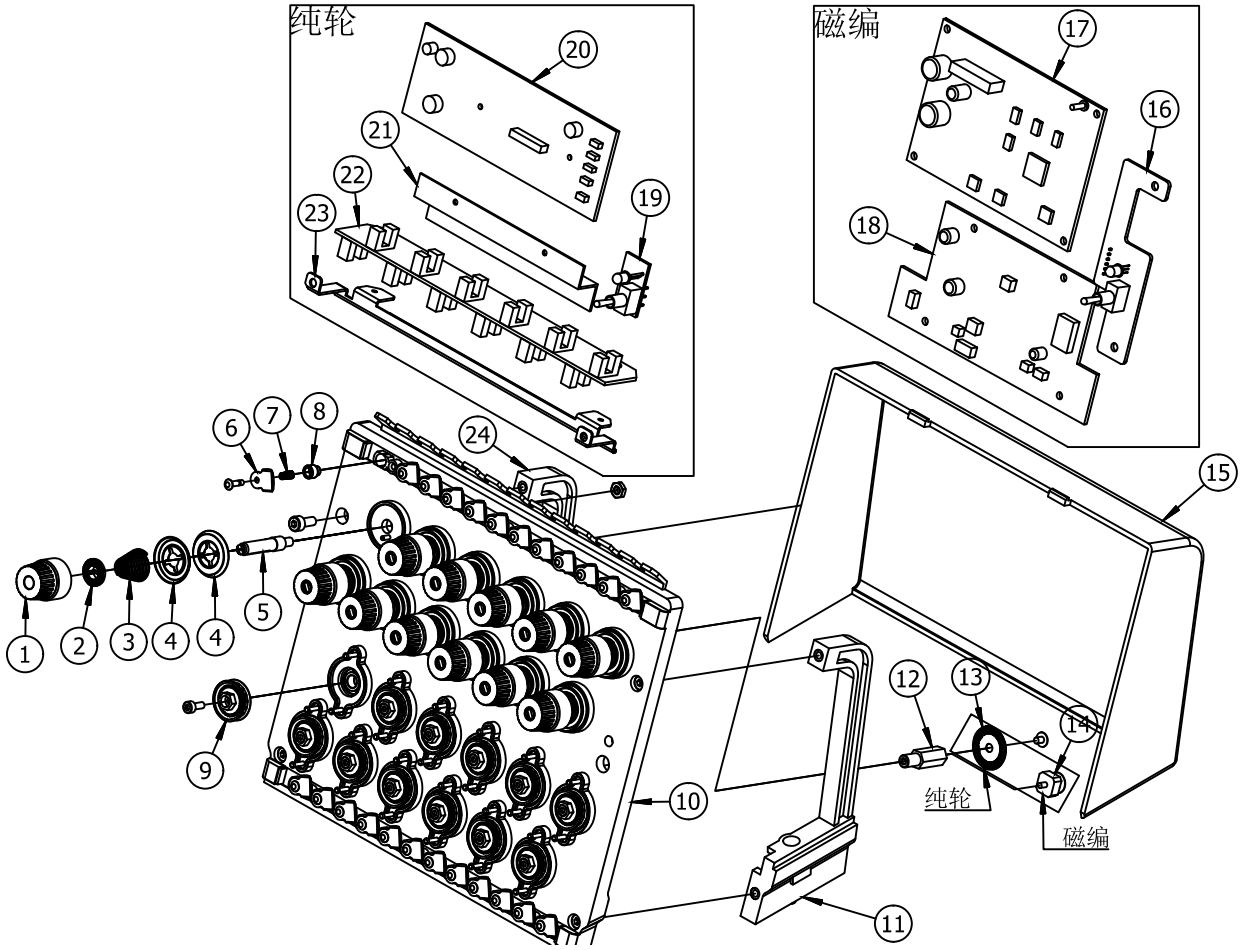

Wheel (Magnetic Braiding) Thread Tension Base Parts

	Part Number	Description
1	4106110060-**XN-A-1	Thread feeder knob head-brown (xN)
2	4106110060-**XN-A-2	Knob lock gasket (xN)
3	4106110060-**XN-A-3	Spring (xN)
4	4106110060-**XN-A-4	Knob thread clamp (xN)
5	4106110060-**XN-A-5	Knob rod of thread feeder (xN)
6	4106110060-**XN-A-6	Thread pressing sheet (xN)
7	4106110060-**XN-A-7	Spring (xN)
8	4106110060-**XN-A-8	Spring fixing base (xN)
9	4106110060-**XN-A-9	Photosensitive drive wheel (xN)
10	4106110060-**XN-A-10	Thread clamping base-wheel (x1)
11	4106110060-**XN-A-11	Fixing of thread feeder rubber cover -right (x1)
12	4106110060-**XN-A-12	Photosensitive shaft (xN)
13	4106110060-**XN-A-13	Photosensitive wheel (xN)
14	4106110060-**XN-B-1	Sensing block (xN)
15	4106110060-**XN-A-14	Thread feeder rubber cover-number of needles (x1)

Wheel (Magnetic Braiding) Thread Tension Base Parts

	Part Number	Description
16	4106110060-**XN-B-2	Switch head board (x1)
17	4106110060-**XN-B-3	Magnetic head board 1 (x1)
18	4106110060-**XN-B-4	Magnetic head board 2 (x1)
19	4106110060-**XN-A-15	Switch head board (x1)
20	4106110060-**XN-A-16	Thread Break Detection Board-wheel (x1)
21	4106110060-**XN-A-17	Support- thread wiper of thread feeder (x1)
22	4106110060-**XN-A-18	Sensor Board (x1)
23	4106110060-**XN-A-19	Sensor Board Support (x1)
24	4106110060-**XN-A-20	Cable guide rubber cover fixer- Left (x1)

Wheel + Spring Thread Tension Base

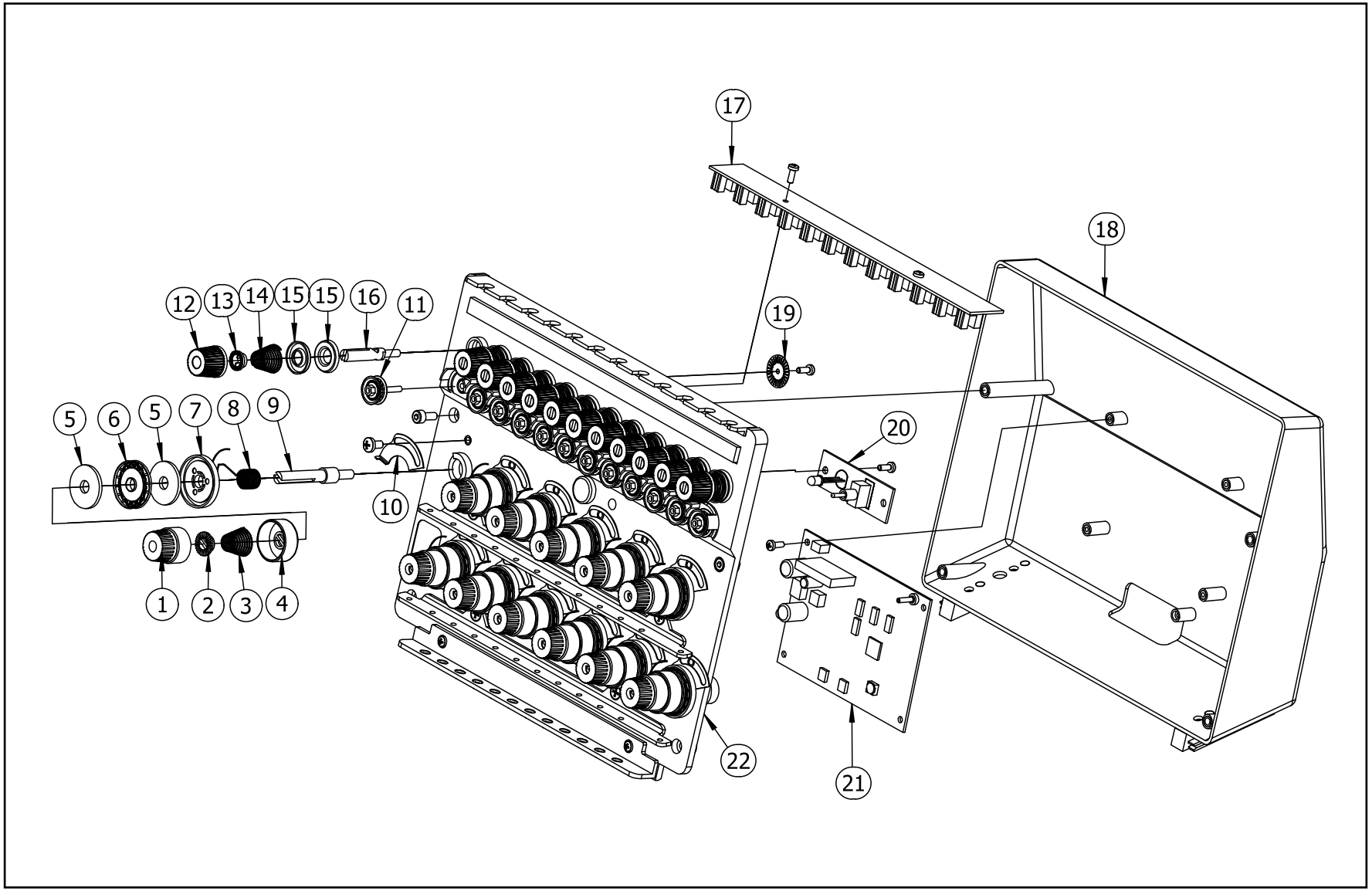

Wheel + Spring Thread Tension Base Parts

	Part Number	Description
1	722160***XN-1	Large knob head (xN)
2	722160***XN-2	Adjusting knob (xN)
3	722160***XN-3	Knob spring 1 (xN)
4	722160***XN-4	Small thread loosening bowl (xN)
5	722160***XN-5	Felt pad (xN)
6	722160***XN-6	Thread feeding wheel (xN)
7	722160***XN-7	Knob spring pad (xN)
8	722160***XN-8	Take-up spring (xN)
9	722160***XN-9	Large tension bolt (xN)
10	722160***XN-10	Pressing sheet (xN)
11	722160***XN-11	Photosensitive drive wheel (xN)
12	722160***XN-12	Knob head (xN)
13	722160***XN-13	Knob gear (xN)
14	722160***XN-14	Knob spring (xN)
15	722160***XN-15	Knob thread clamp (xN)

Wheel + Spring Thread Tension Base Parts

	Part Number	Description
16	722160***XN-16	Small knob bolt (x1)
17	722160***XN-17	Sensor Board (x1)
18	722160***XN-18	Back cover of thread tension base (x1)
19	722160***XN-19	Photosensitive wheel (xN)
20	722160***XN-20	switch head board (x1)
21	722160***XN-21	Thread Break Detection Board-machine head (x1)
22	722160***XN-22	Wheel + spring thread tension base (x1)

Thread Stand

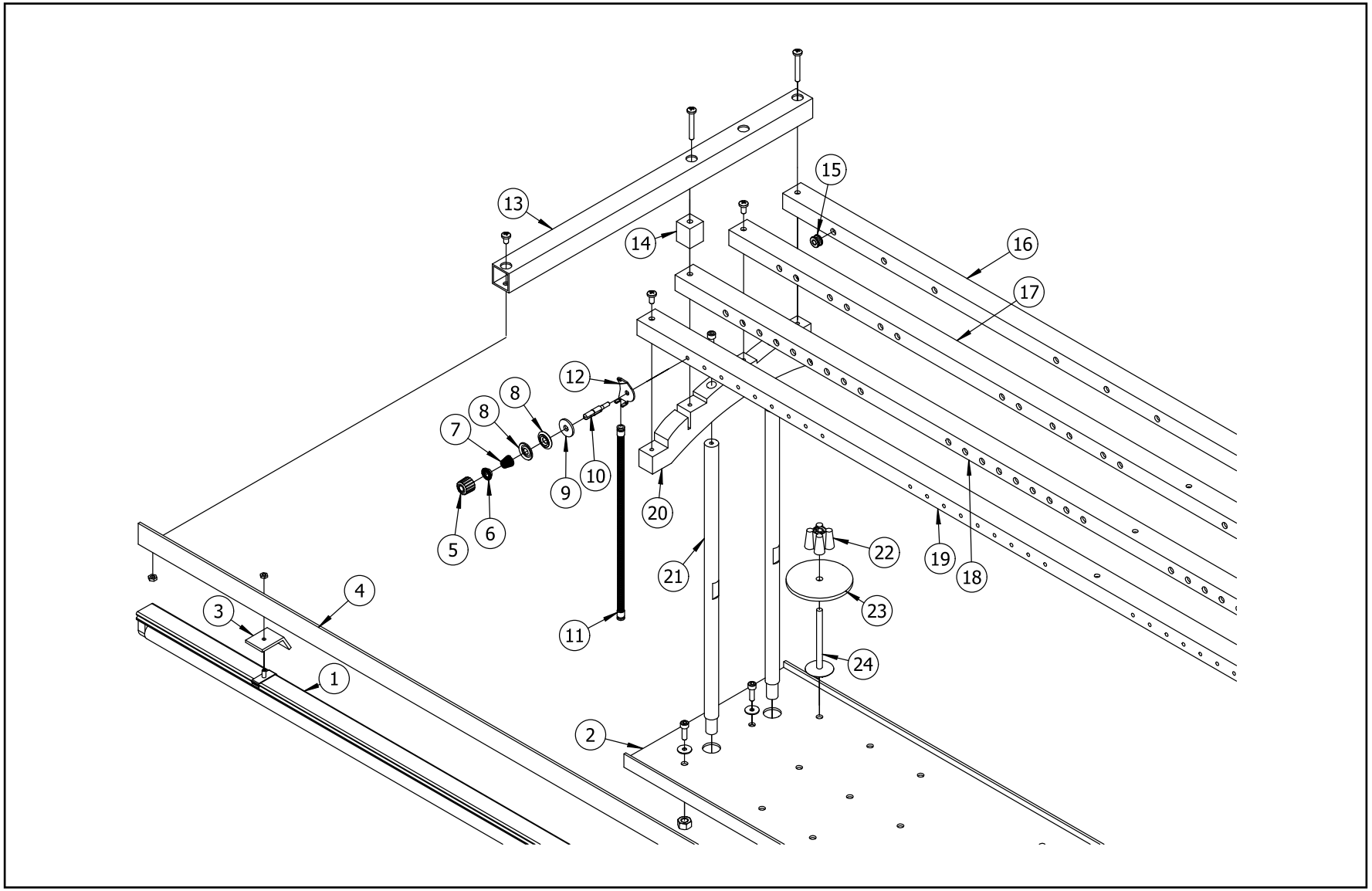

Thread Stand Parts

	Part Number	Description
1	802410**	Lamp-LED-182-**M (xN)
2	41120100****	Thread Plate -FP(x1)
3	4013050003	Bracket-lighting under the beam (x2)
4	4112010011XN**-5	Lighting thread frame in front of beam(x1)
5	4112010007-1	Small thread clamping regulator (xN)
6	4112010007-2	Lock gasket (xN)
7	4112010007-3	Small thread clamping spring (xN)
8	4112010007-4	Rotating thread clamping plate (xN)
9	4112010007-5	Felt gasket, thread clamping (xN)
10	4112010007-6	Thread clamping bolt (xN)
11	722116**	Plastic Thread Tube Components -*** (xN)
12	4112010007-7	Lead plate of thread frame (xN)
13	4013050001	Lighting support in front of beam (xN)
14	4013050002.	Lighting gasket in front of beam (xN)
15	8062813*	Thread feeding porcelain sleeve (xN)

Thread Stand Parts

	Part Number	Description
16	4112010011XN**-1	Thread Stand assembly -1 (x1)
17	4112010011XN**-2	Thread Stand assembly -2 (x1)
18	4112010011XN**-3	Thread Stand assembly -3 (x1)
19	4112010011XN**-4	Thread Stand assembly -4 (x1)
20	4013050000	Oblique beam of thread stand (xN)
21	0190310*	Thread Stand Pole-350 (xN)
22	80211008	Plastic Cushion (xN)
23	80211009	Foam Cushion (xN)
24	80211007	Thread Spool Pole (xN)

Electronic Control

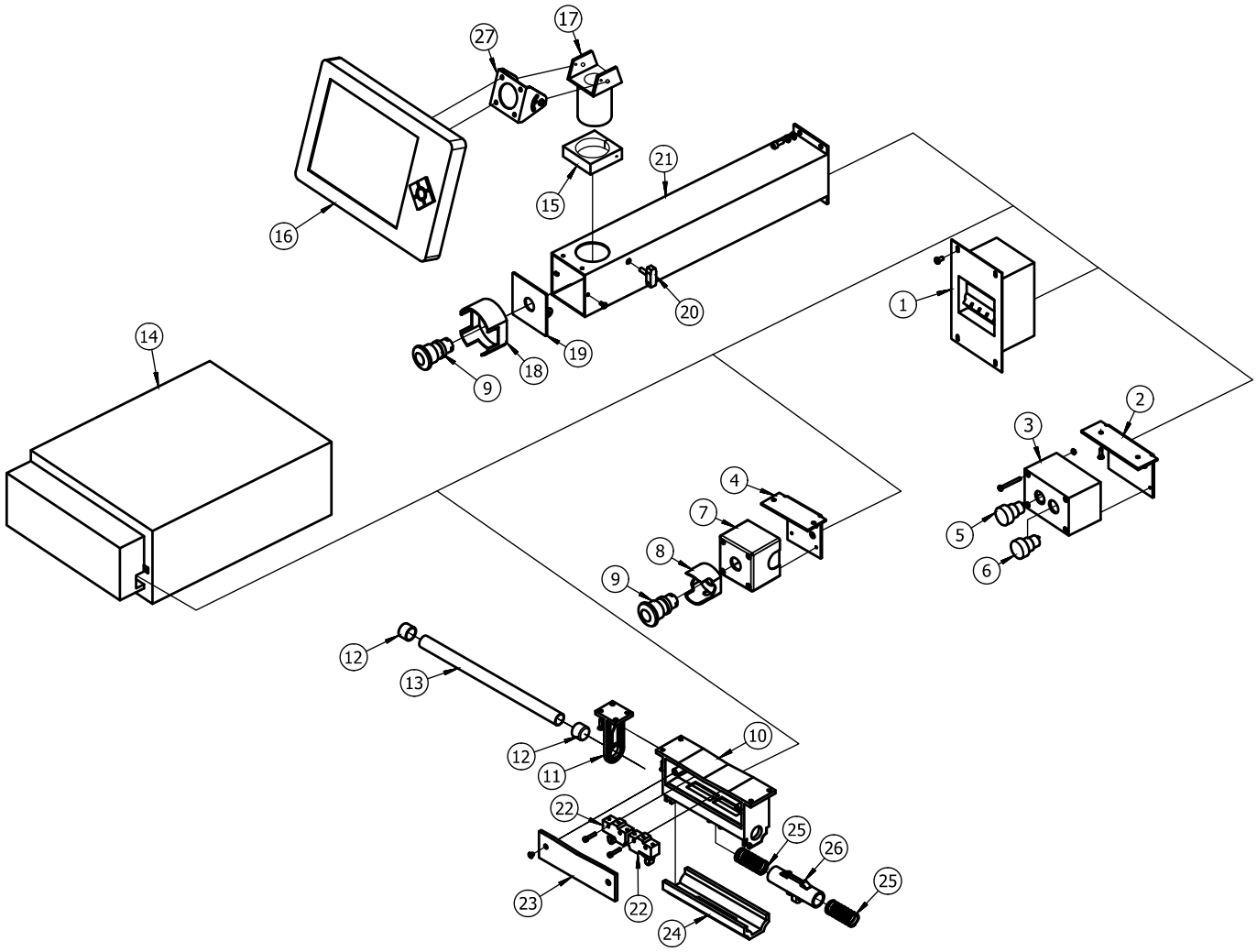

Electronic Control Parts

	Part Number	Description
1	80380631	Power switch (x1)
2	4102020001	Switch base plate-start and stop (x1)
3	4102030008	Start-stop switch box (x1)
4	4102020002	Switch base plate-emergency stop (x1)
5	80350101	Switch button-red (x1)
6	80350102	Switch button-green (x1)
7	4102030009-1	Emergency stop switch box (x1)
8	4102030009-2	Emergency stop switch protective cover (x11)
9	4102030009-3	Emergency stop switch (x1)
10	4102020003-1	Pull rod switch box (x1)
11	410202005	Support-pull rod (x1)
12	410202004-1	Pull rod sleeve (x2)
13	410202004-2	Pull rod (x1)
14	8023****	Electric control box (x1)
15	4102030003	Hoop- mounting base of rotating box (x1)

Electronic Control Parts

	Part Number	Description
16	8023****	Touch screen (x1)
17	4102030002	Rotating base-operation box A (x1)
18	4102030007	Emergency stop of switch protective cover (x1)
19	4102030006-PY	Switch base plate-emergency stop of operation box (x1)
20	4102030005	Screw -t handle -M5 (x1)
21	4102030001-PY	Mounting base-operation box (x1)
22	4102020003-2	Limit switch (x2)
23	4102020003-3	Side cover of pull rod switch box (x1)
24	4102020003-4	Bottom cover of pull rod switch box (x1)
25	4102020003-5	Spring (x2)
26	4102020003-6	Limit block of pull rod (x1)
27	4102030004	Mounting bracket-operation box (x1)